DAIKIN ALTHERMA
HEAT PUMP WALL MOUNTED CONVECTOR

© 2025

DAIKIN COMFORT TECHNOLOGIES MANUFACTURING, INC.
19001 Kermier Rd., Waller, TX 77484
www.daikincomfort.com
P/N: IO-7039 Date: December 2025

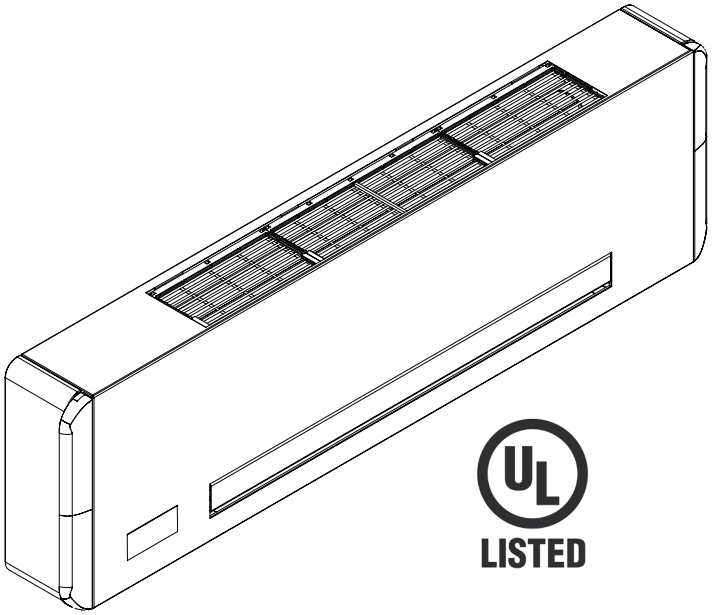

FWXT03
FWXT05
FWXT07

⚠ WARNING

DO NOT BYPASS SAFETY DEVICES.

Safety Considerations

The following symbols and labels are used throughout this manual to indicate immediate or potential safety hazards. It is the owner's and installer's responsibility to read and comply with all safety information and instructions accompanying these symbols. Failure to heed safety information increases the risk of personal injury, property damage, and/or product damage.

Meaning of warnings and symbols

⚠	**WARNING** Indicates a situation that could result in death or serious injury.
⚠	**CAUTION** Indicates a situation that could result in minor or moderate injury

NOTE: Field wiring must comply with the latest edition of NFPA 70.

Installation must comply with the latest edition of applicable national, state, and local codes.

⚠ WARNING

ONLY PERSONNEL THAT HAVE BEEN TRAINED TO INSTALL, ADJUST, SERVICE, MAINTENANCE OR REPAIR (HEREINAFTER, "SERVICE") THE EQUIPMENT SPECIFIED IN THIS MANUAL SHOULD SERVICE THE EQUIPMENT.

THIS EQUIPMENT IS NOT INTENDED FOR USE BY PERSONS (INCLUDING CHILDREN) WITH REDUCED PHYSICAL, SENSORY OR MENTAL CAPACITIES, OR LACK OF EXPERIENCE AND KNOWLEDGE, UNLESS THEY HAVE BEEN GIVEN SUPERVISION OR INSTRUCTION CONCERNING USE OF THE APPLIANCE BY A PERSON RESPONSIBLE FOR THEIR SAFETY.

CHILDREN SHOULD BE SUPERVISED TO ENSURE THAT THEY DO NOT PLAY WITH THE EQUIPMENT.

THE MANUFACTURER WILL NOT BE RESPONSIBLE FOR ANY INJURY OR PROPERTY DAMAGE ARISING FROM IMPROPER SUPERVISION, SERVICE OR SERVICE PROCEDURES. IF YOU SERVICE THIS UNIT, YOU ASSUME RESPONSIBILITY FOR ANY INJURY OR PROPERTY DAMAGE WHICH MAY RESULT. IN ADDITION, IN JURISDICTIONS THAT REQUIRE ONE OR MORE LICENSES TO SERVICE THE EQUIPMENT SPECIFIED IN THIS MANUAL, ONLY LICENSED PERSONNEL SHOULD SERVICE THE EQUIPMENT. IMPROPER SUPERVISION, INSTALLATION, ADJUSTMENT, SERVICING, MAINTENANCE OR REPAIR OF THE EQUIPMENT SPECIFIED IN THIS MANUAL, OR ATTEMPTING TO INSTALL, ADJUST, SERVICE OR REPAIR THE EQUIPMENT SPECIFIED IN THIS MANUAL WITHOUT PROPER SUPERVISION OR TRAINING MAY RESULT IN PRODUCT DAMAGE, PROPERTY DAMAGE, PERSONAL INJURY OR DEATH.

QUEBEC DISCLOSURE REGARDING AVAILABILITY OF REPLACEMENT PARTS, REPAIR SERVICES AND INFORMATION FOR MAINTENANCE AND REPAIR: Daikin Comfort Technologies Manufacturing, Inc. (Daikin) does not guarantee the availability of (1) replacement parts; (2) repair services; and (3) information necessary to maintain or repair products, within the meaning of section 39.1 of the Consumer Protection Act, CQLR, c P-40.1 and section 79.18 of the Regulation respecting the application of the Consumer Protection Act, CQLR, c P-40.1, r. 3.

AVIS POUR LE QUÉBEC CONCERNANT LA DISPONIBILITÉ DES PIÈCES DE RECHANGE, DES SERVICES DE RÉPARATION ET DES RENSEIGNEMENTS POUR L'ENTRETIEN ET LA RÉPARATION : Daikin Comfort Technologies Manufacturing, Inc. (Daikin) ne garantit pas la disponibilité (1) des pièces de rechange, (2) des services de réparation et (3) des renseignements pour l'entretien et la réparation, au sens de l'article 39.1 de la Loi sur la protection du consommateur, RLRQ c P-40.1 et de l'article 79.18 du Règlement d'application de la Loi sur la protection du consommateur, RLRQ c P-40.1, r 3.

This unit has been tested, approved and certified in accordance with UL/CSA 60335 2-40.

Table of contents

1. General Information 2
   1.1 Manual Organization 2
   1.2 General Warnings 2
   1.3 Basic Rules of Safety 3
   1.4 Disposal 4
2. Product Presentation 4
   2.1 Destination of Use 4
   2.2 Description of the Appliance 4
   2.3 Dimensions 5
   2.4 Material Accompanying the Unit 5
3. Installation 6
   3.1 Preliminary Warnings 6
   3.2 Reception 6
   3.3 Dimensions and Weights with Packaging 6
   3.4 Installation Site 7
   3.5 Installation Mode 7
   3.6 Minimum Installation Space 8
   3.7 Positioning 8
   3.8 Hydraulic Connections 10
   3.9 Condensation Drain Preparation 18
   3.10 Filling the System 20
   3.11 Electrical Connections 20
4. Touchpad and Remote Control 22
   4.1 Interface 22
   4.2 Installation 22
   4.3 Connection Diagram 23
   4.4 Functions 24
5. Maintenance 26
   5.1 Preliminary Warnings 26
   5.2 Routine Maintenance 26
   5.3 Six-Monthly Operations 26
   5.4 Suggestions for Energy Saving 28
6. Troubleshooting 29
   6.1 Preliminary Warnings 29
   6.2 Troubleshooting Table 29
7. Technical Information 30
8. Installation Template 32

1. General Information

Related to safety

Symbol	Explanation
	**Read instruction manual** Read the instructions carefully before performing any work on the device.
	**Instruction manual** Read the information available in the technical documentation of the device.
	**Caution: Electrical Danger** The concerned personnel is informed to the presence of electricity and the risk of suffering an electric shock.

1.1 Manual Organization

The manual is divided into sections each dedicated to one or more target groups.

General information
It addresses all recipients. It contains general information and important warnings that should be known before installing and using the device.

Product presentation
It addresses all recipients. It contains the information to identify the product, its components, compatible accessories and destination of use.

Installation
It is addressed exclusively to the installer. It contains specific warnings and all the information necessary for positioning, mounting and connecting the appliance.

Control panels
It is addressed only and exclusively to the Installer and the Authorized Service Center. These are sections dedicated to the different types of controls and electronic boards combined with the range with specific information for that combination.

Commissioning, maintenance and troubleshooting
They are addressed exclusively to the Authorized Service Center. It contains specific warnings and useful information for the most common commissioning and routine maintenance.

Technical information
It addresses all recipients. It contains detailed technical information about the appliance.

1.2 General Warnings

WARNING

SPECIFIC WARNINGS ARE GIVEN IN EACH CHAPTER OF THE DOCUMENT AND MUST BE READ BEFORE STARTING OPERATIONS.

WARNING

ALL PERSONNEL INVOLVED MUST BE AWARE OF THE OPERATIONS AND DANGERS THAT MAY ARISE WHEN BEGINNING ALL UNIT INSTALLATION OPERATIONS.

WARNING

INSTALLATION PERFORMED OUTSIDE THE WARNINGS PROVIDED IN THIS MANUAL AND USE OF THE APPLIANCE OUTSIDE THE PRESCRIBED TEMPERATURE LIMITS IS NOT COVERED BY THE WARRANTY.

WARNING

The installation and maintenance of climate control equipment can be dangerous due to live electrical components inside the appliances. The installation, initial start-up and subsequent maintenance phases must be carried out exclusively by authorized and qualified personnel.

WARNING

Any contractual or extra-contractual liability for damage caused to persons, animals or property, due to installation, adjustment and maintenance errors, or improper use, is excluded. All uses not expressly indicated in this manual are not permitted.

WARNING

Only suitably qualified installers are authorized to install the device.

WARNING

First start-up and repair or maintenance operations must be carried out by a qualified service technician or by qualified personnel following the provisions of this manual.

WARNING

Do not modify or tamper with the appliance as this can lead to dangerous situations.

WARNING

Use suitable personal protective clothing and equipment during installation and/or maintenance operations. The Manufacturer is not liable for the non-observance of the current safety and accident prevention regulations.

WARNING

In the event of liquid or oil leaks, set the main switch of the plant to "OFF" and isolate water taps where applicable. Call the Authorized Service Center or professionally qualified personnel as soon as possible and do not work on the appliance yourself.

WARNING

In case of replacement of parts, use only original parts.

WARNING

The Manufacturer reserves the right to make changes to its models at any time to improve its product, without prejudice to the essential characteristics described in this manual. The manufacturer is not obliged to add such modifications to machines previously manufactured, already delivered or under construction.

1.3 Basic Rules of Safety

Please keep in mind that the use of products powered by electricity and water call for operators to comply with certain essential safety rules:

CAUTION

Operation of the appliance by children and unassisted disabled persons is prohibited.

CAUTION

It is forbidden to touch the device with wet or damp body parts.

WARNING

It is forbidden to carry out any operation before disconnecting the appliance from the power supply by setting the system main switch to "OFF".

WARNING

It is forbidden to modify the safety or adjustment devices, or adjust without authorization of the manufacturer.

WARNING

It is forbidden to pull, unplug or twist the device's electric cables, even if it is disconnected from the mains.

WARNING

It is forbidden to introduce objects and substances through the air inlet and outlet grills.

WARNING

It is forbidden to open the access doors of the device's internal parts without first having set the main switch of the system to "OFF".

WARNING

It is forbidden to incorrectly dispose of the packaging, or leave in the reach of children, which may become source of danger.

1.4 Disposal

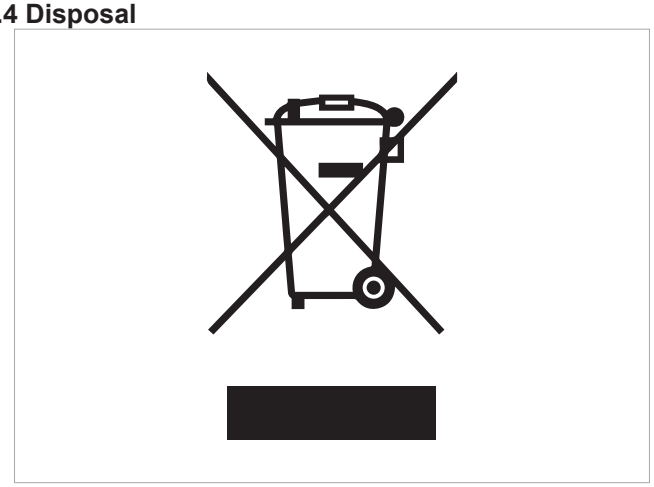

The symbol on the product or packaging indicates that the product must not be treated as normal household waste, but must be taken to the appropriate collection point for recycling.

Proper disposal of this product avoids harm to humans and the environment and promotes the reuse of valuable raw materials.

For more detailed information about the recycling of this product, contact your local authority, your household waste disposal service or the shop where you purchased the product.

Illegal disposal of the product by the user involves the application of the administrative sanctions provided for by the regulations in force.

WARNING

AVOID DISASSEMBLING THE UNIT YOURSELF. CONTACT AN AUTHORIZED SERVICE CENTER TO DISASSEMBLE THE APPLIANCE.



This symbol might be used in combination with a chemical symbol.

In this case, it complies with the requirement set by the Directive for the chemical involved.

2. Product Presentation

2.1 Destination of Use

These appliances have been designed for conditioning and/or heating rooms and they must be destined solely for this purpose, in accordance with their performance characteristics.

WARNING

IT IS FORBIDDEN TO USE THE DEVICE OTHER THAN AS INDICATED.

2.2 Description of the Appliance

Daikin range fancoils are produced in the FWXT version for high-wall installation.

The device are made in three different performance levels and size:

- FWXT03
- FWXT05
- FWXT07

All sizes are suitable for installation on two-pipe systems.

2.3 Dimensions

	u.m.	FWXT03AATSBUCL	FWXT05AATSBUCL	FWXT07AATSBUCL
		FWXT03AATSBUCR	FWXT05AATSBUCR	FWXT07AATSBUCR
Dimensions				
A	in (mm)	36.50 (927)	44.37 (1127)	52.24 (1327)
Weight	lb (kg)	30.86 (14)	35.27 (16)	41.89 (19)

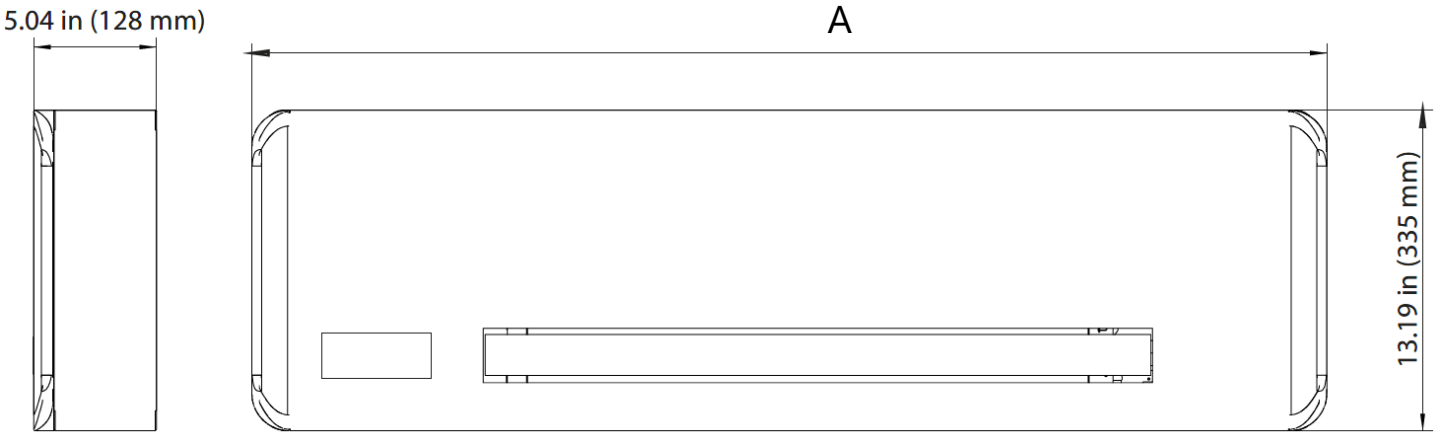

2.4 Material Accompanying the Unit

Remove the following accessories supplied with the convector.

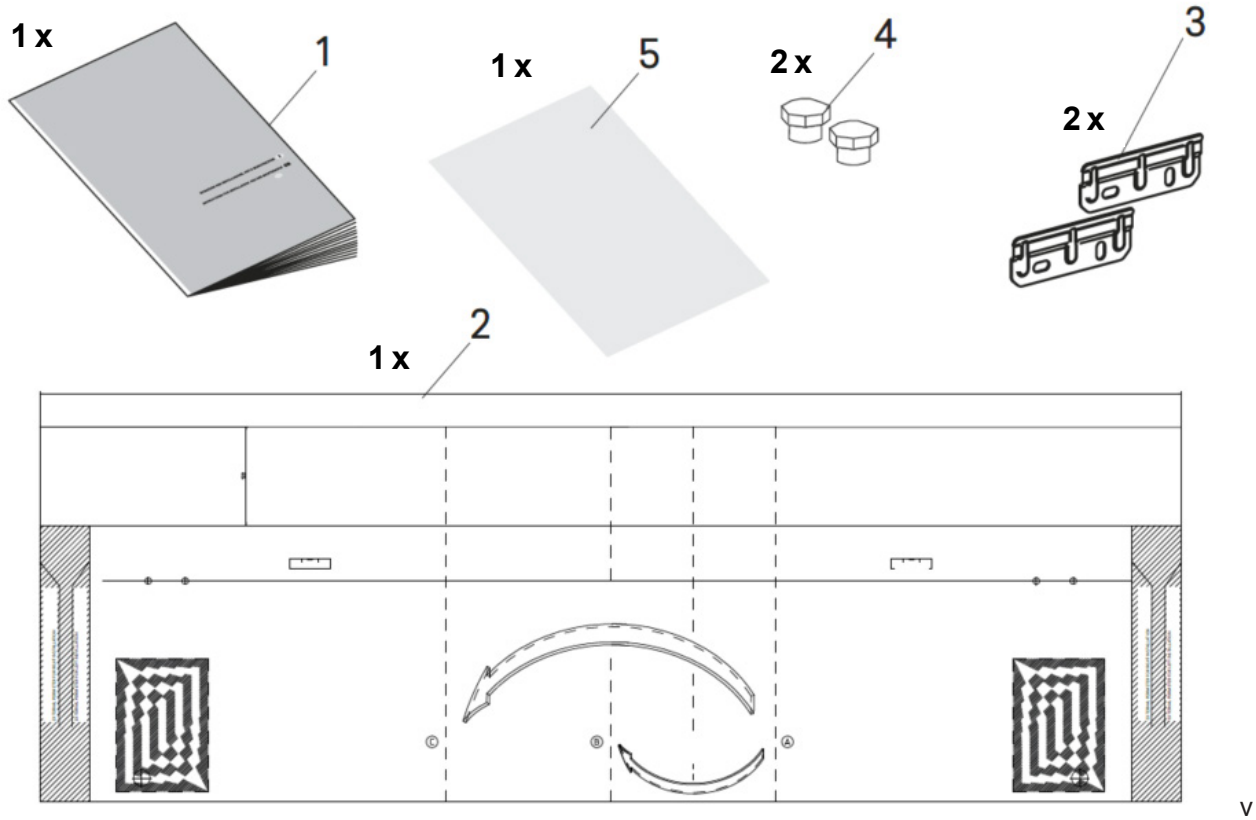

1: Installation and operation manual
2: Installation template
3: Wall mounting brackets
4: Eurokonus to NPT adapters
5: Warranty document

3. Installation

3.1 Preliminary Warnings

WARNING

For detailed information on the products, refer to chapter "Technical information" P. 30.

WARNING

The installation must be carried out by the installer in accordance with national, state and local codes. There is a risk of water leakage, electric shock or fire if the installation is not performed correctly.

WARNING

During the installation, it is necessary to observe the precautions mentioned in this manual, and on the labels placed inside the equipment, as well as to adopt any precaution suggested by common sense and by the Safety Regulations in force in the place of installation.

WARNING

Be sure to use the supplied or specified installation parts. Use of other parts may cause the unit to come loose, leak water, or cause electrical shock, or fire.

WARNING

Before carrying out any work, please ensure the power supply is disconnected.

WARNING

All operations of an electrical nature must be carried out by qualified personnel having the necessary training, who understands the legal requirements, and is informed about the risks related to such operations.

WARNING

All connections must be made following the regulations in force in the country of installation.

WARNING

The unit must only be powered after work has been completed.

WARNING

Isolate and lock off the main circuit breaker before making any electrical connections and performing any type of operation.

WARNING

Access to the electrical panel is only permitted to qualified personnel.

WARNING

Refer to the respective section of the control, used to make the electrical connections.

3.2 Reception

3.2.1 Preliminary warnings

Upon receipt of the package check that it is not damaged, otherwise accept the goods with reserve, producing photographic evidence of any damage. No notice of damage will be accepted after 3 days from delivery. Unpack and check the contents of individual components against the packing list.

3.2.2 Package description

The packaging is made of suitable material and carried out by experienced personnel. All units are checked and tested and are delivered complete and in perfect condition. The appliance is shipped in standard packaging consisting of a cardboard sleeve and a set of expanded polystyrene protectors.

3.3 Dimensions and Weights with Packaging

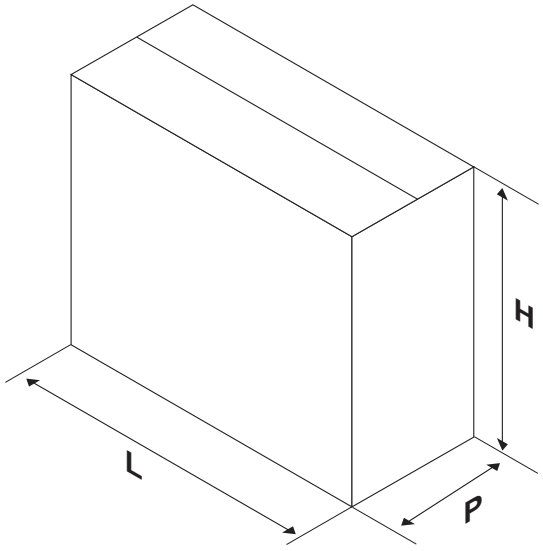

Packaging	u.m	FWXT03	FWXT05	FWXT07
Dimensions				
Width (L)	in (mm)	40.75 (1035)	48.62 (1235)	56.50 (1435)
Height (H)	in (mm)	19.29 (490)	19.29 (490)	19.29 (490)
Depth (P)	in (mm)	8.39 (213)	8.39 (213)	8.39 (213)
Weight	lb (kg)	33.07 (15)	37.48 (17)	44.09 (20)

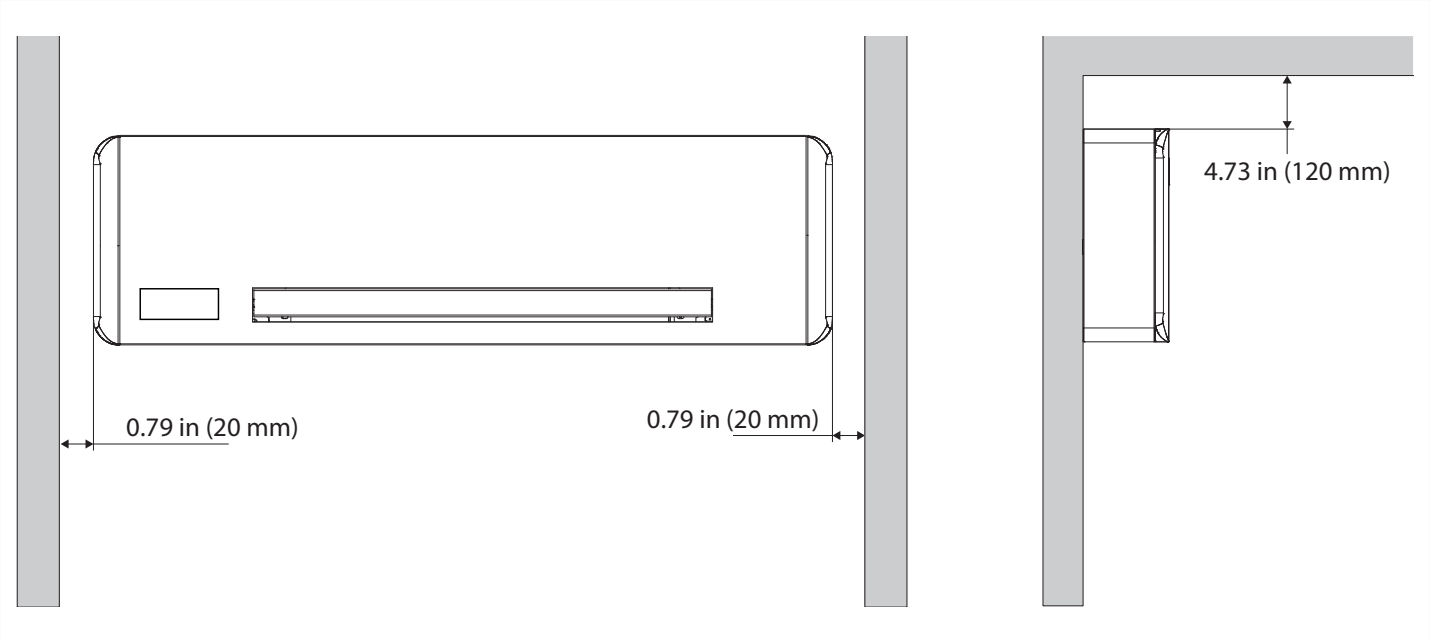

3.4 Installation Site

Position of device must be established by the system designer or other qualified professional and must take into account both technical requirements and any local codes in force.

The Wall mounted fancoil has to be installed only in high position on the wall, with a maximum height of 7.2 ft (2.2 m) from the bottom of the unit.

3.4.1 Preliminary warnings

WARNING

AVOID INSTALLING THE UNIT NEAR:

- OBSTACLES OR BARRIERS THAT CAUSE RECIRCULATION OF THE EXHAUST AIR.
- NARROW PLACES WHERE THE SOUND LEVEL OF THE APPLIANCE CAN BE ENHANCED BY REVERBERATIONS OR RESONANCES.
- ENVIRONMENTS WITH THE PRESENCE OF FLAMMABLE OR EXPLOSIVE GASES.
- VERY HUMID ENVIRONMENTS (LAUNDRIES, GREENHOUSES, ETC.).
- ENVIRONMENTS WITH AGGRESSIVE ATMOSPHERES.
- SOLAR RADIATION AND PROXIMITY TO HEAT SOURCES.
- ROOMS SUBJECT TO HIGH FREQUENCIES.

WARNING

DO NOT INSTALL OVER HEAT SOURCES.

WARNING

MAKE SURE THAT:

- THE INSTALLATION SITE OF THE UNIT MUST BE CHOSEN WITH THE UTMOST CARE TO GUARANTEE ADEQUATE PROTECTION FROM SHOCKS AND CONSEQUENT DAMAGE.
- THE SUPPORTING STRUCTURE IS ABLE TO SUPPORT THE WEIGHT OF THE APPLIANCE.
- THE SUPPORTING STRUCTURE SECTION DOES NOT FEATURE BUILDING SUPPORTING ELEMENTS, PIPES OR POWER LINES.
- THE SUPPORTING SURFACE IS PERFECTLY LEVELED.
- THERE ARE NO OBSTACLES TO THE FREE CIRCULATION OF AIR.
- THE APPLIANCE MUST BE INSTALLED IN A POSITION WHERE IT CAN BE EASILY SERVICED.
- THE SAFETY DISTANCES BETWEEN THE UNITS AND OTHER APPLIANCES OR STRUCTURES ARE SCRUPULOUSLY RESPECTED SO THAT THE AIR ENTERING AND LEAVING THE FANS IS FREE TO CIRCULATE.

WARNING

IF THE APPLIANCE IS INSTALLED INCOMPLETELY OR ON AN INAPPROPRIATE BASE, IT COULD CAUSE DAMAGE TO PERSONS OR PROPERTY IF IT SHOULD DETACH FROM ITS BASE.

WARNING

PROVIDE THE FOLLOWING:

- A NEARBY DRAIN FOR THE OUTFLOW OF CONDENSATE.
- A COMPLIANT POWER SUPPLY NEARBY.
- FIXING ELEMENTS SUITABLE FOR THE TYPE OF SUPPORT.

3.5 Installation Mode

The assembly steps described below and their drawings refer to a version of the machine with connections on the right side.

The operations for the mounting of machines with fixtures on the left (L) are exactly the same. Only the images are to be considered as a mirror image. To ensure that the installation is performed correctly and that the appliance will perform carefully follow the instructions indicated in this manual. Failure to respect the rules indicated not only can cause malfunctions of the appliance but may not be covered by the warranty and hence DAIKIN shall not be responsible for any damage to persons, animals or property.

CAUTION

FOR IDEAL INSTALLATION AND PERFORMANCE LEVELS, CAREFULLY FOLLOW THE INSTRUCTIONS IN THE MANUAL.

CAUTION

FAILURE TO FOLLOW THE INSTRUCTIONS IN THIS MANUAL MAY CAUSE SYSTEM MALFUNCTIONS AND IS NOT COVERED BY THE WARRANTY, AND RELIEVES THE MANUFACTURER OF ANY HARM CAUSED TO PERSONS, ANIMALS OR PROPERTY.

3.6 Minimum Installation Space

The clearance zones for the installation and maintenance of the appliance are shown in the figure above. Established spaces are necessary to avoid barriers to airflow and allow for normal cleaning and maintenance.

CAUTION

MAKE SURE THAT THERE IS SUFFICIENT SPACE TO ALLOW THE PANELS TO BE REMOVED FOR ROUTINE AND SUPPLEMENTARY MAINTENANCE OPERATIONS.

3.7 Positioning

The wall mounted fancoil has to be installed only in high position on the wall, with a maximum height of 7.2 ft (2.2 m) from the bottom of the unit. The units are supplied with a paper template for marking the holes necessary for installation.

CAUTION

HOLD THE TEMPLATE IN THE CORRECT POSITION WITH SUITABLE TAPE WITHOUT CAUSING ANY DAMAGE TO THE SUPPORTING STRUCTURE.

3.7.1 Device preparation

Before proceeding with the installation, it is necessary to remove some elements from the appliance.

Remove the Filter

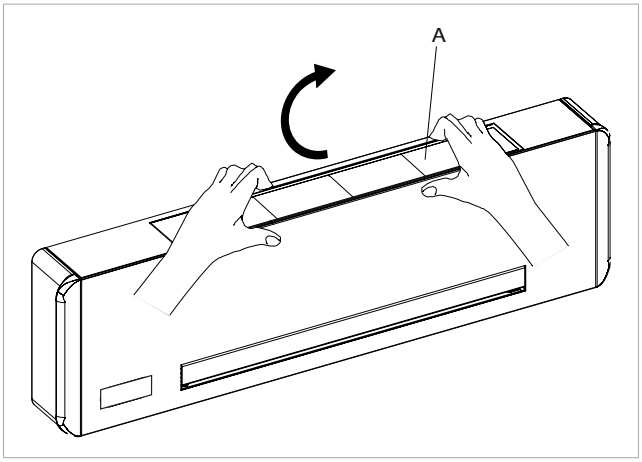

A. Filter

- Lift the filter slightly
- Rotate until it's completely removed from the housing

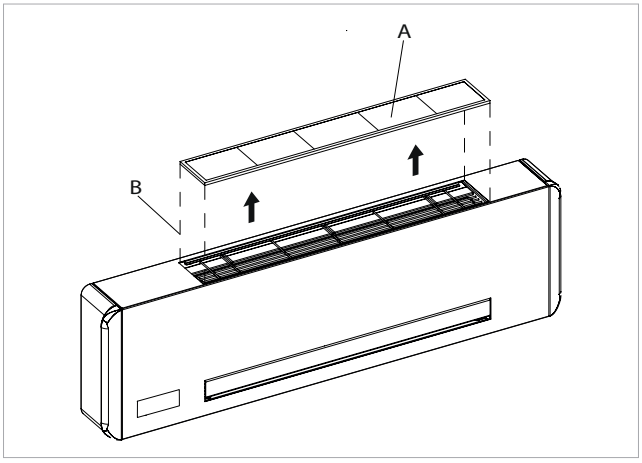

A. Filter
B. Extraction direction

- Remove the filter

Removal of the Aesthetic Front Panel

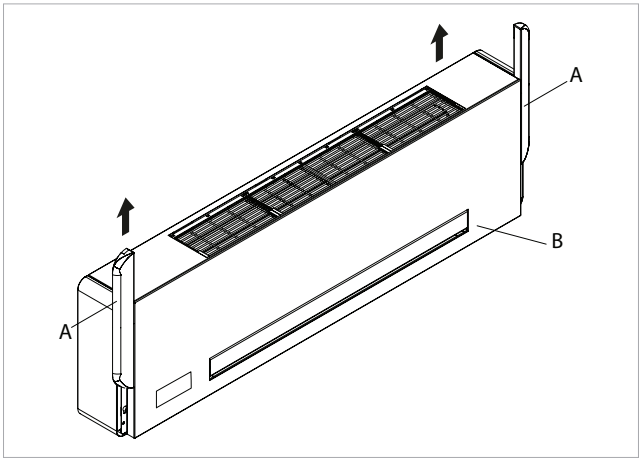

A. Side panels
B. Aesthetic front panel

- Remove the side panels by lifting them upwards

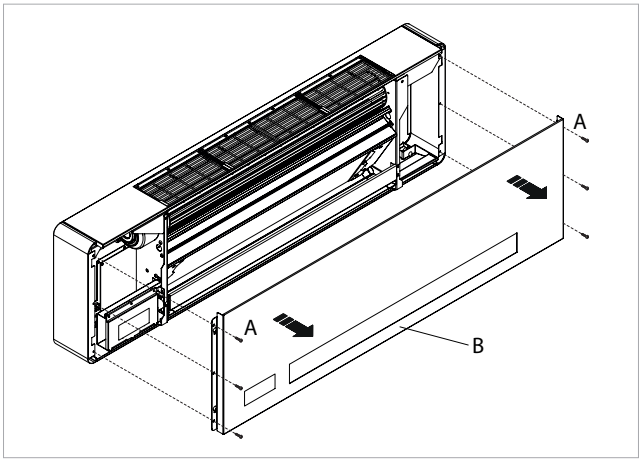

A. Fixing screws
B. Aesthetic front panel

- Unscrew the fixing screws
- Remove the aesthetic front panel

Remove the Side Panels

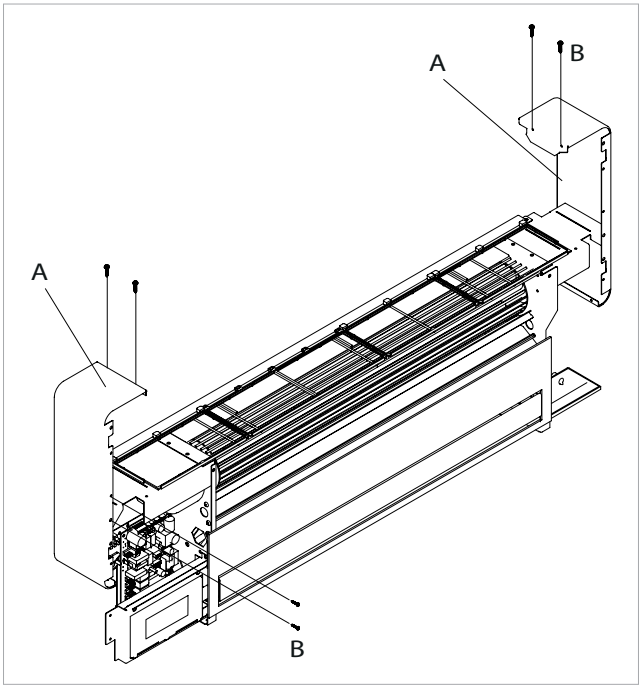

A. Side panels
B. Side fixing screws

- Unscrew the fixing screws
- Remove the side panels

3.7.2 Installation Arrangement

To install the appliance, use a recessed box to contain the connections.

NOTE: If the appliance is installed later, leave the connecting pipes plentiful so as not to make joints.

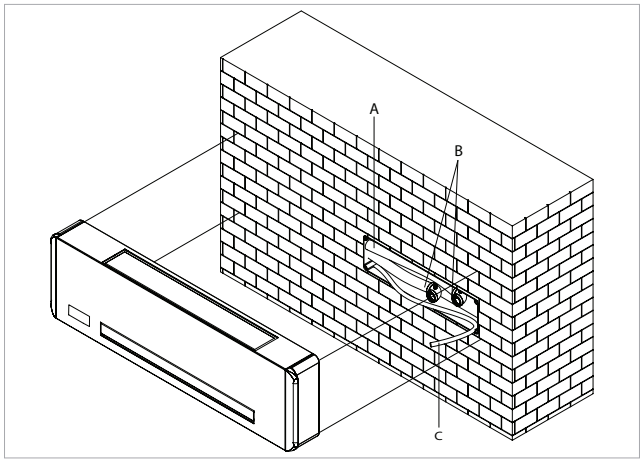

A. Built-in recess
B. Connecting water pipelines
C. Condensation drainage pipe

3.7.3 Positioning

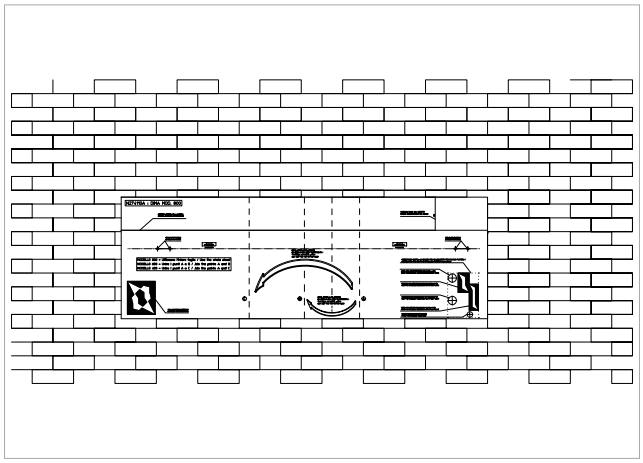

- Use the paper template supplied with the device
- Trace the position of the fixing brackets
- Drill holes in the wall

WARNING

MAKE SURE THAT THE SUPPORT WALL IS SUITABLE FOR THE WEIGHT OF THE APPLIANCE.

WARNING

MAKE SURE THAT THE WALL IS NOT CROSSED BY PIPELINES, LOAD-BEARING CONSTRUCTION ELEMENTS OR POWER LINES.

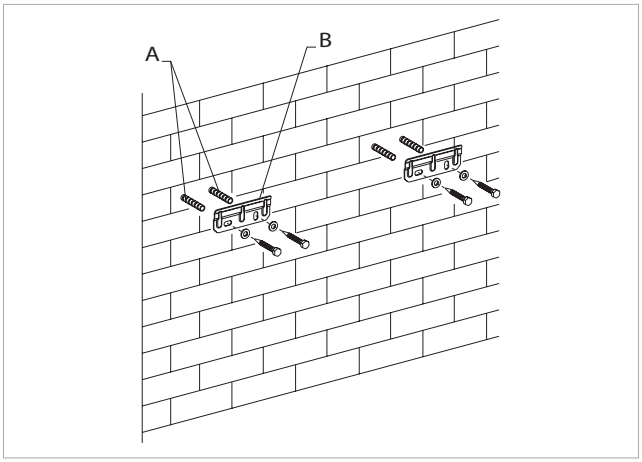

A. Plugs
B. Bracket

- Insert the anchors
- Position the support brackets
- Partially secure the screws

NOTE: Do not fully secure the screws so that you can adjust the position of the appliance.

NOTE: Use anchors suitable for the chosen supporting structure.

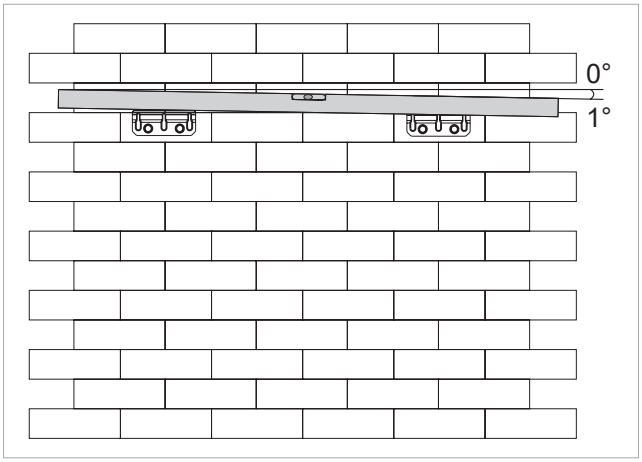

- Use a level
- Check the inclination towards the attachment side
- Secure the screws

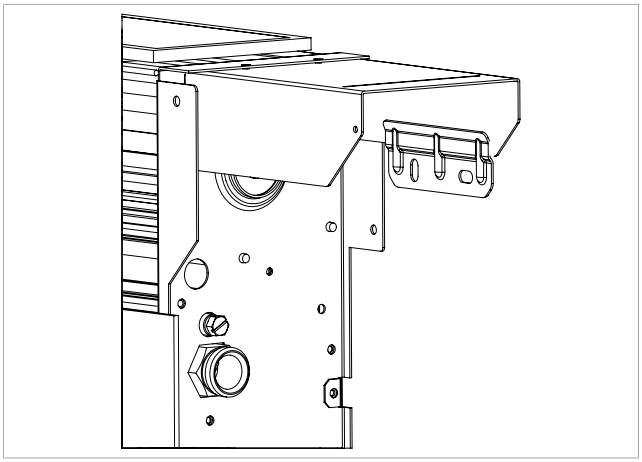

- Assemble the unit
- Check right attachment to the bracket

Incorrect Installation

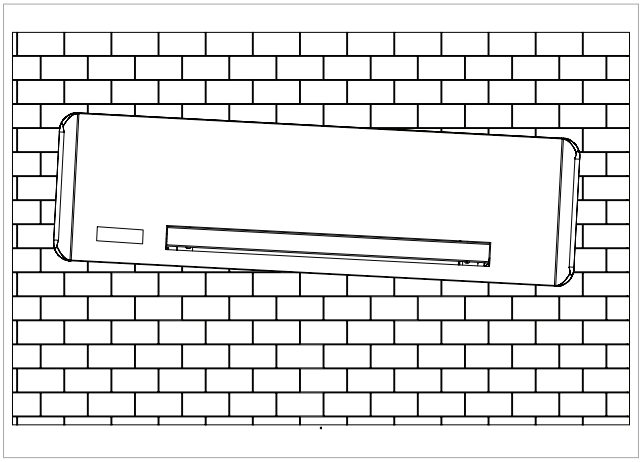

- Check the inclination towards the attachment side

CAUTION

THE INCLINATION MUST NOT EXCEED AN ANGLE OF 1°.

NOTE: The images refer to a version of the appliance with the connection on the right. If the appliance has the connection on the left side, the operation must be adapted accordingly.

3.8 Hydraulic Connections

The installer is responsible for choosing the right water lines and their size, in accordance with good installation practices and the applicable codes.

CAUTION

KEEP IN MIND THAT UNDERSIZED PIPELINES LEAD TO POOR SYSTEM OPERATION AND/OR A LOSS OF HEATING AND COOLING PERFORMANCE.

3.8.1 Position

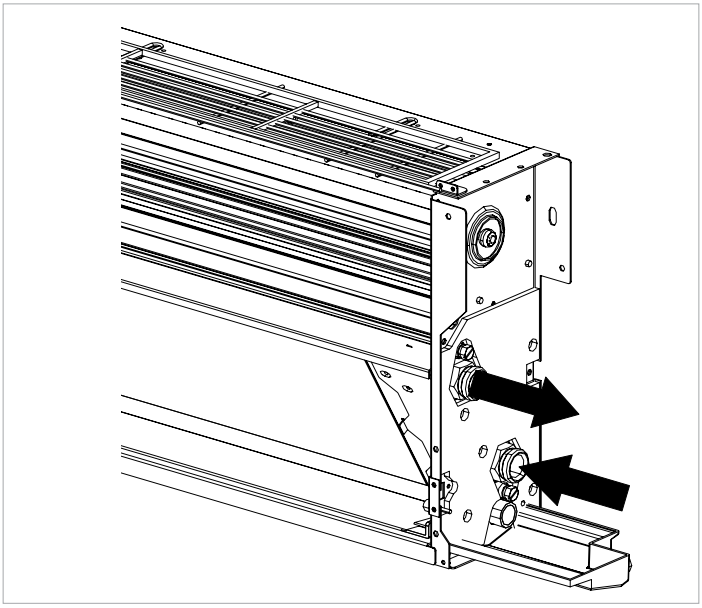

3.8.2 Connection to the system

To make the connections:

- Hydraulic lines positioning
- Use the “back-up wrench” method
- Tighten the connections
- Check for leaks
- Coat the connections with insulating material

CAUTION

THE HYDRAULIC LINES AND FITTINGS MUST BE THERMALLY INSULATED.

CAUTION

AVOID PARTIAL INSULATION OF THE PIPES.

CAUTION

AVOID OVER-TIGHTENING THE TAPE TO AVOID DAMAGING THE INSULATION.

CAUTION

CAREFULLY CHECK THAT THE INSULATION IS TIGHT, IN ORDER TO PREVENT THE FORMATION OF CONDENSATE.

3.8.3 Hydraulic accessories

As standard, the unit is supplied without shut-off valves. In other cases, depending of the request, the unit can be supplied with valves already assembled or supplied separately to be mounted during installation.

CAUTION

THE 2-WAY OR 3-WAY MOTORIZED VALVES ARE MANDATORY FOR THE CORRECT OPERATION OF THE UNIT.

CAUTION

ALWAYS PROVIDE AN ELECTRICALLY CONTROLLED VALVE ON THE MACHINE OR UPSTREAM THAT STOPS THE WATER FLOW WHEN THE SETPOINT IS REACHED.

3.8.4 Connection with 2-way valve and thermoelectric actuator (UKT2VK0)

In case of choice for the 2-way valve and thermoelectric actuator:

- Electrical connection are required
- Connect to the flow at the bottom

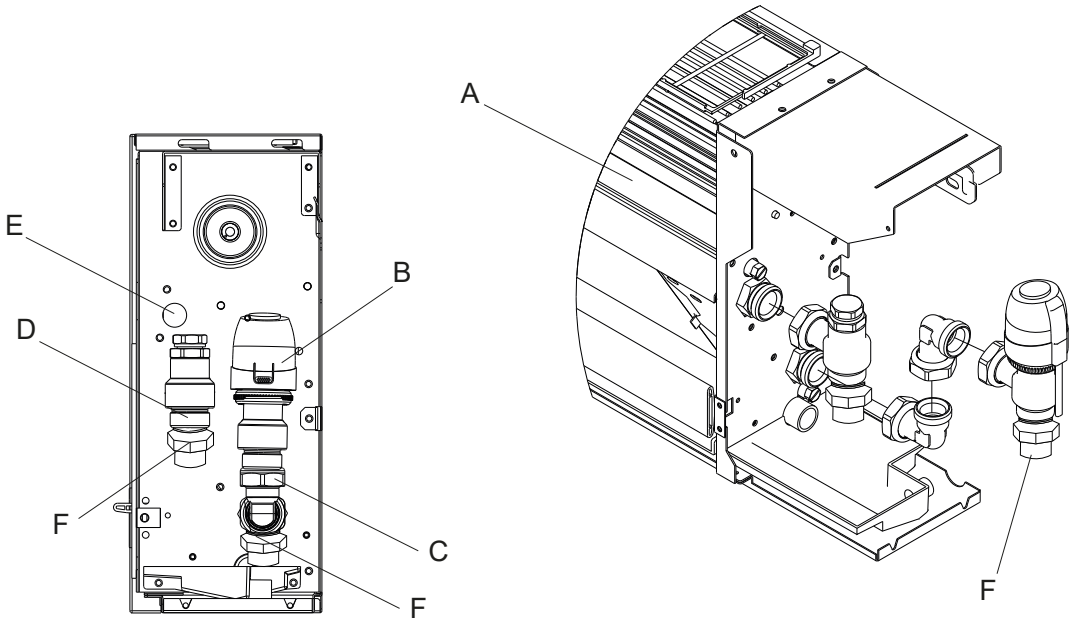

A: Unit
B: Thermoelectric actuator
C: Fitting for water inlet pipe
D: Water outlet pipe fitting
E: Electrical cable entry hole
F: Eurokonus NPT adapter

3.8.5 Connection with 3-way diverting valve unit with thermoelectric actuator (UKT3VK1)

In case of choice for the 3-way diverter valve unit with thermoelectric actuator:

- Electrical connection are required
- Connect to the flow at the bottom

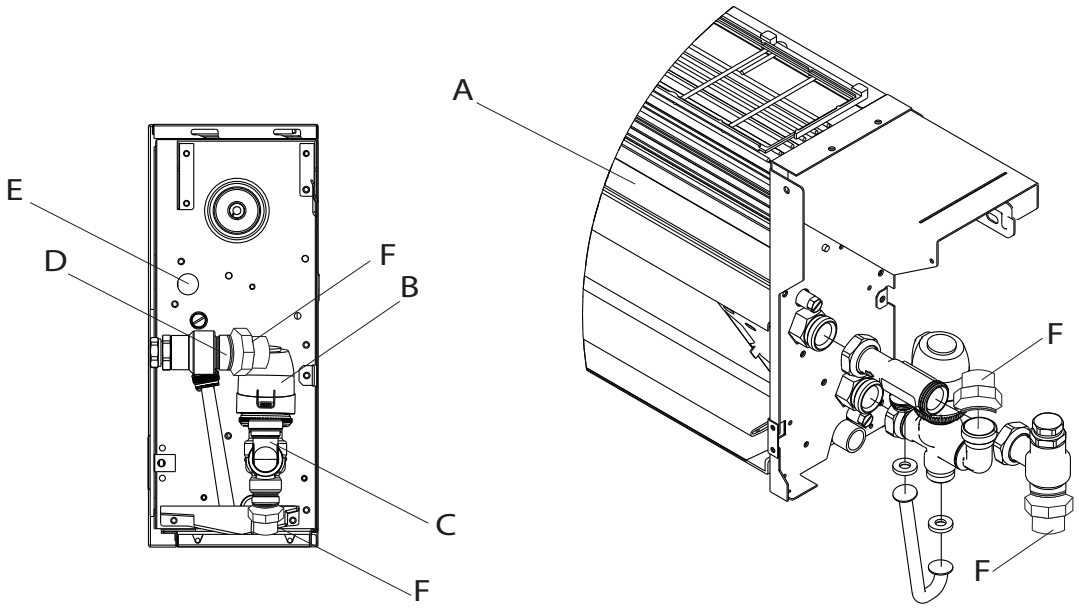

A: Unit
B: Thermoelectric actuator
C: Fitting for water inlet pipe
D: Water outlet pipe fitting
E: Electrical cable entry hole
F: Eurokonus NPT adapter

3.8.6 Connections

The choice and sizing of the hydraulic lines must be made by qualified personnel and in accordance with applicable standards, codes and laws.

To make the connections:

- Position the hydraulic lines
- Tighten the connections using the “wrench and back-up wrench” method
- Check for any liquid leaks
- Coat the connections with insulating material

The hydraulic lines and joints must be thermally insulated. Avoid partially insulating the pipes. Do not over-tighten to avoid damaging the insulation. Use thread sealant to seal the threaded connections; the use of Teflon is advised when there is anti-freeze in the hydraulic circuit.

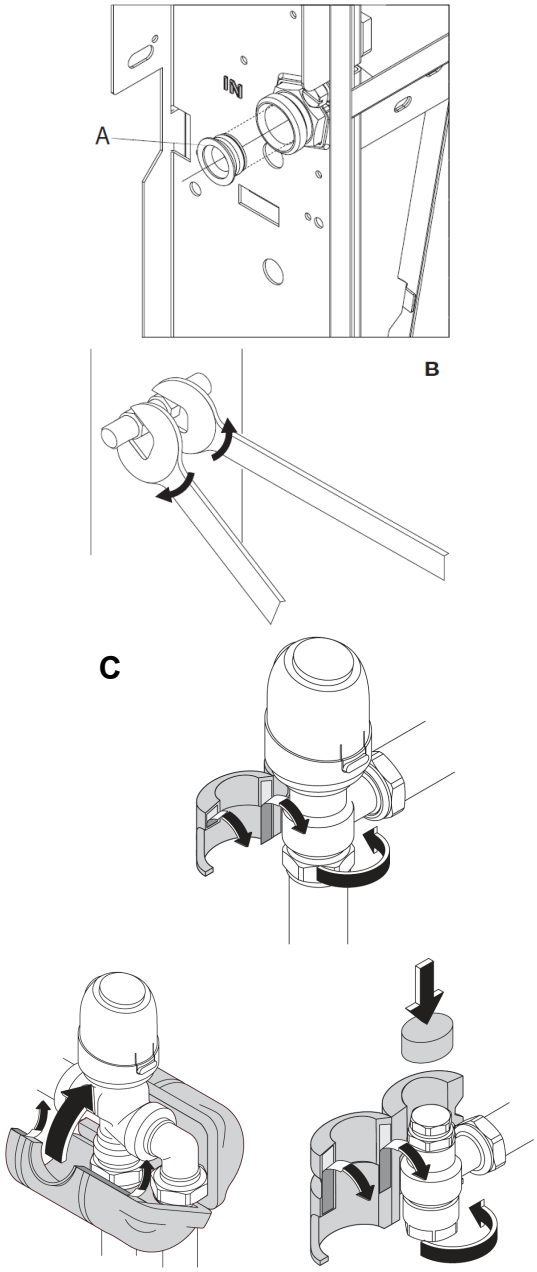

A: Eurokonus adapter
B: Wrench and back-up wrench
C: Coat the connections with insulating material

3.8.7 Mounting manual valve

Turn the upper part of the handwheel, keeping the lower locknut blocked, moving it to a completely open position, then tighten unit until it is fixed to the valve body. At this point, the handwheel performs the adjustment.

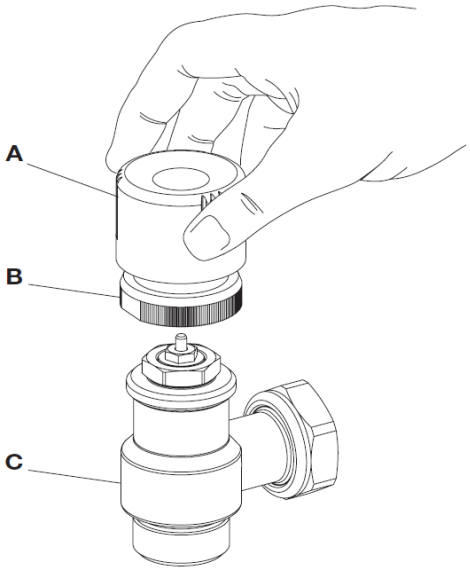

A: Upper part of the handwheel
B: Lower locknut
C: Valve body

3.8.8 Mounting the thermostatic head

Tighten the plastic disc to the valve body. Attach the head to the valve body.

To facilitate the system mounting, filling and venting operations, even without electric power, the thermostatic head is supplied with a tool that keeps it open.

Remove the tool from the thermostatic head before starting the system. This tool should not be removed until the system has been filled.

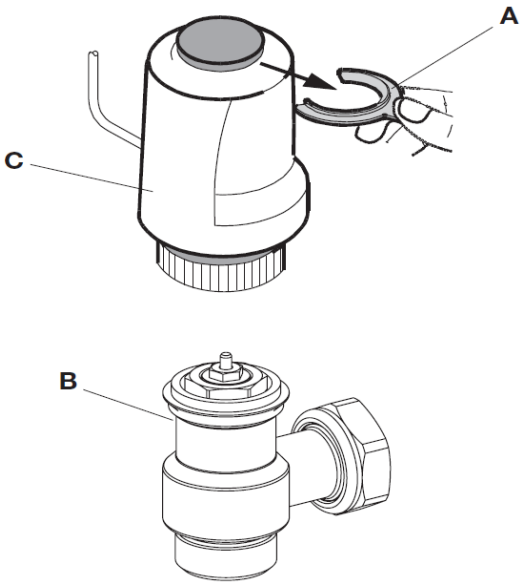

A: Plastic tool
B: Valve body
C: Thermostatic head

Load losses based on the adjustment of the lockshield present in all kits.

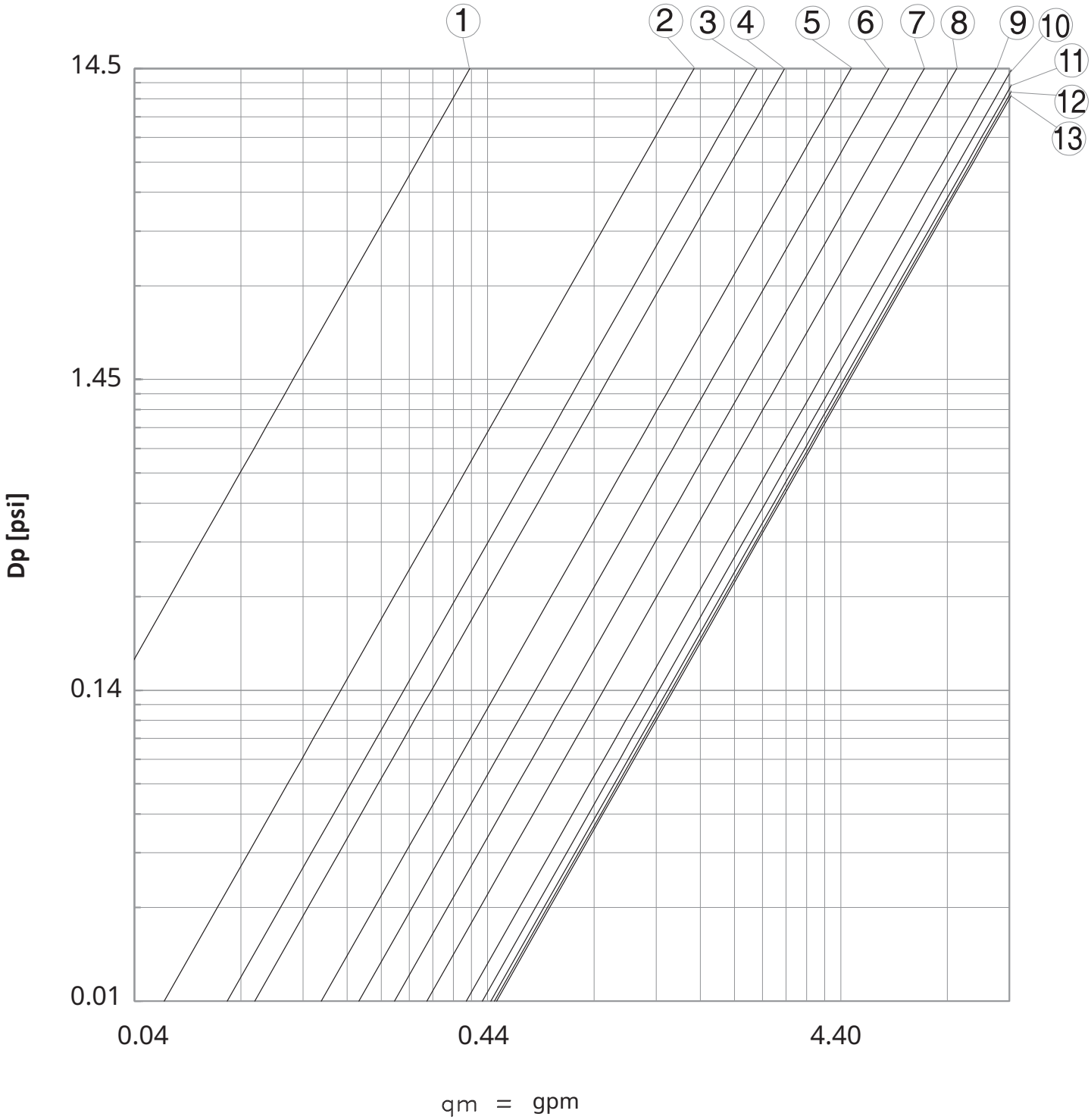

1	2	3	4	5	6	7	8	9	10	11	12	13	Pos.
1.25	1.5	1.75	2	2.25	2.5	2.75	3	3.5	4	4.5	5	5.5	Turns
0.104	0.439	0.670	0.797	1.429	1.583	1.988	2.462	3.179	3.537	3.733	3.826	3.872	Cv

Load losses in completely open position of 2-way valve present in kits UKT2VK0.

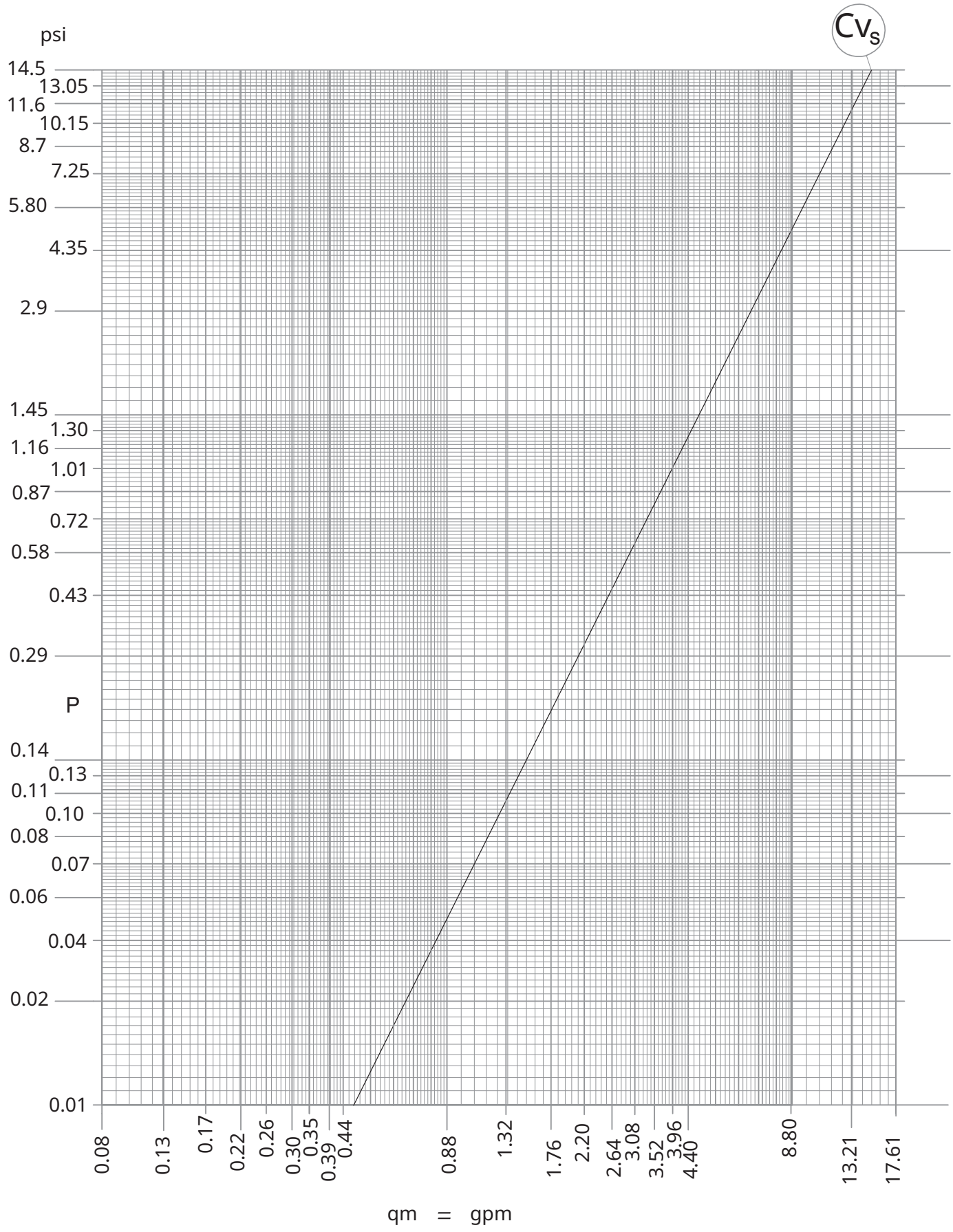

$Cv_S = 4.16$

3-Way valve with thermoelectric actuator deviator valve kit (UKT3VK1)

Consists of a 3-way deviator valve with thermoelectric actuator and a lockshield, fitted with micrometric adjustment, capable of balancing the system load losses). The kit contains the insulation to be mounted on the valve and on the lockshield.



Diagram of load losses of deviator valve, present in kit UKT3VK1 in completely open position.

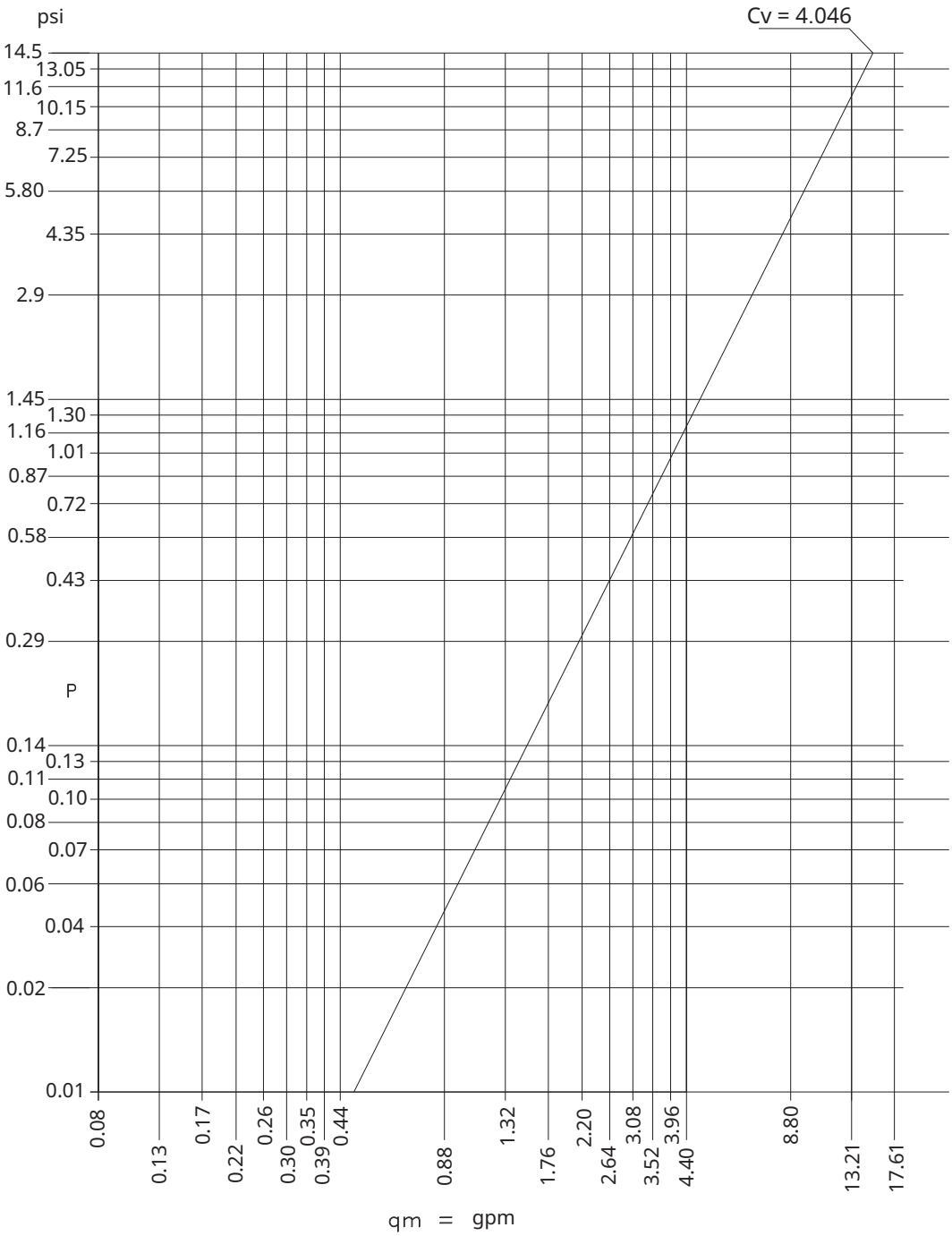

Diagram of load losses of deviator valve, present in kit UKT3VK1, in completely closed position.

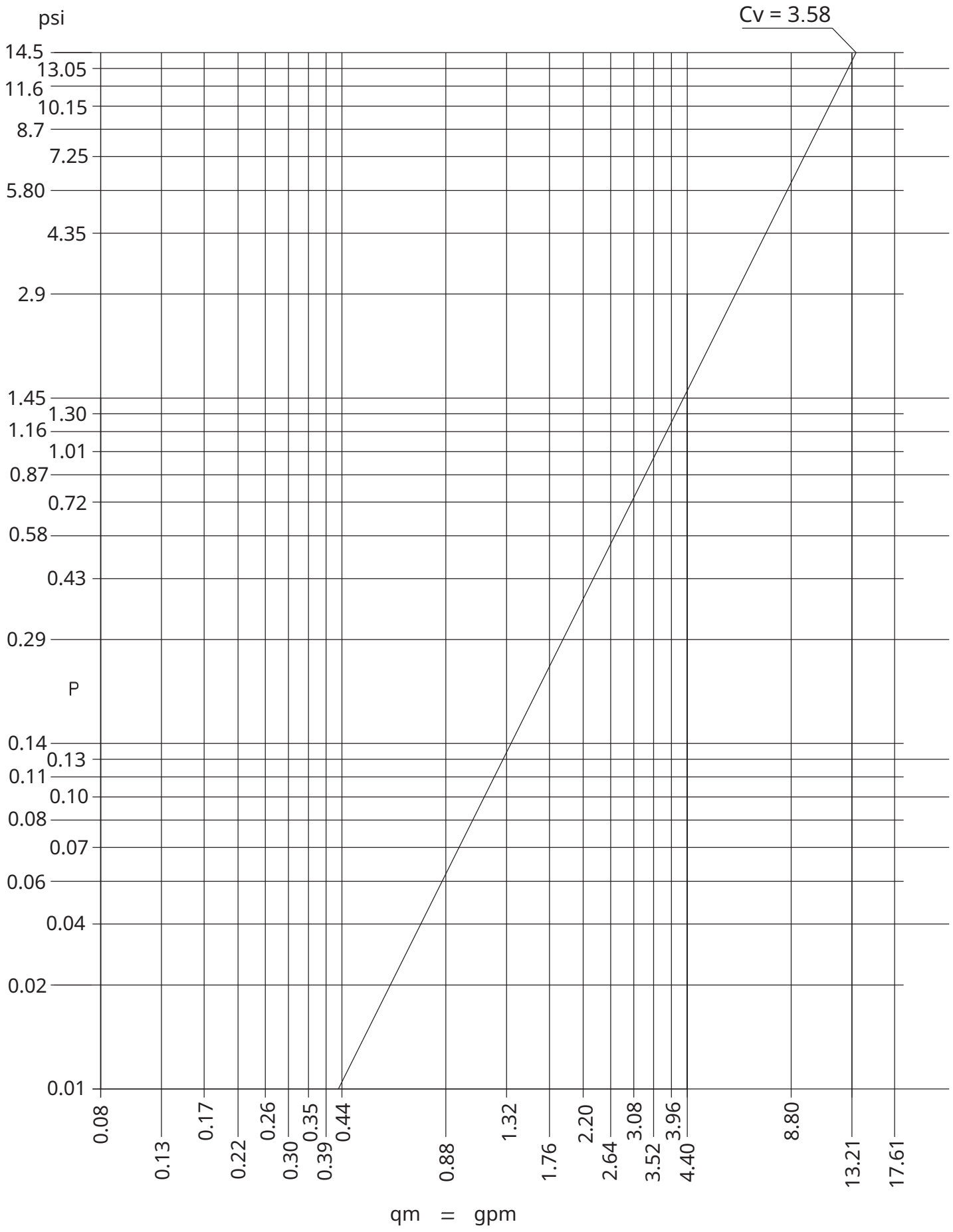

3.8.9 By-pass (only needed with the 3-way valve)

The by-pass is an overpressure valve that keeps the system balanced when the 2-way supply valve in the convector radiator is closed. Inside, there is a plug which, under normal conditions, remains closed. If, due to the closure of the 2-way valve, it is subjected to a stress that is more than that of the calibration valve, it opens so that the water can circulate through the by-pass circuit.

3.8.10 Lockshield adjustment

The lockshields supplied with the hydraulic kits provide an adjustment that balances the system load losses. To ensure a correct adjustment and balancing of the circuit, follow the procedure indicated below:

- With a screwdriver, loosen and remove the slotted grub screw inside the hexagonal head.
- Close the adjustment screw using a 5 mm Allen wrench (A).
- Re-tighten the slotted grub screw then mark the reference point for the adjustment with an “x” (B).
- Align the screwdriver with the “x”, then open with a number of turns (C) according to diagram Δp-Q.

The number of turns refers to the micrometric screw.

Then fully open the screw (D). Now the pre-adjustment has been set and will not change if there are repeated openings or closings with the Allen wrench.

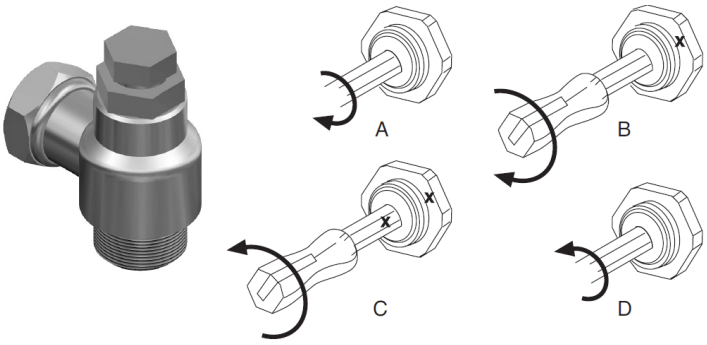

3.9 Condensation Drain Preparation

This appliance is complete with a tray for collecting the condensate produced during operation, which must be channeled to a suitable place for drainage. The size and positioning of the drainage tube are shown below.

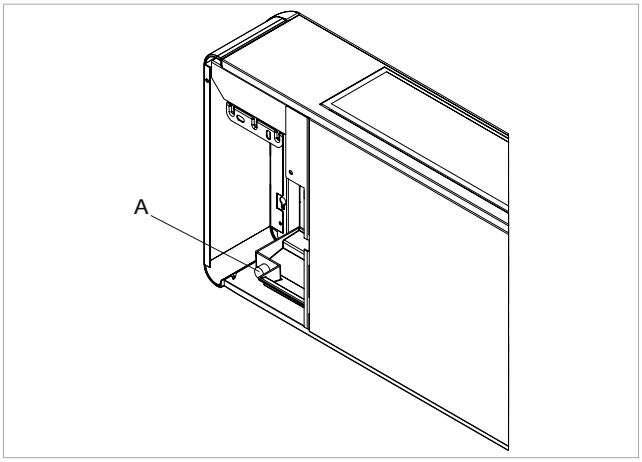

A. Drain connection 0.55” (14 mm)

3.9.1 Preliminary warnings

WARNING

IF THE LINE FLOWS INTO A CONTAINER (E.G. A TANK), DO NOT CLOSE THE CONTAINER HERMETICALLY AND AVOID IMMERSING THE DRAINING PIPE INTO THE WATER.

WARNING

THE HOLE FOR THE CONDENSATION PIPE MUST ALWAYS SLOPE TOWARDS THE OUTSIDE.

WARNING

THE EXACT POSITION IN WHICH TO PLACE THE PIPE MOUTH IS INDICATED ON THE TEMPLATE.

WARNING

CHECK THAT THE EXPELLED WATER DOES NOT CAUSE ANY DAMAGE OR PROBLEMS TO PEOPLE OR OBJECTS. DURING WINTER, THIS WATER MAY CREATE SHEETS OF ICE OUTSIDE.

WARNING

IF YOU DO NOT WANT TO PREPARE AN EXTERNAL DRAINAGE PIPE IN “HEAT ONLY” MODE, IT IS ADVISABLE TO CLOSE THE CONDENSATE DRAIN WITH A PLUG.

3.9.2 Positioning

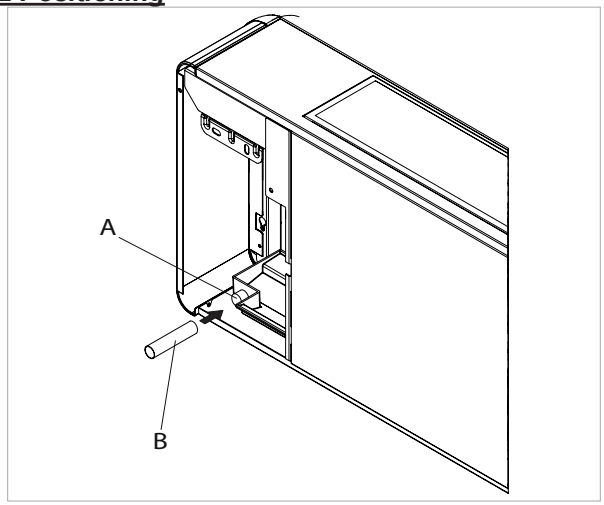

A. Drain connection
B. Drainage tube

- Connect a rubber drainage tube
- Direct it to a suitable place for draining

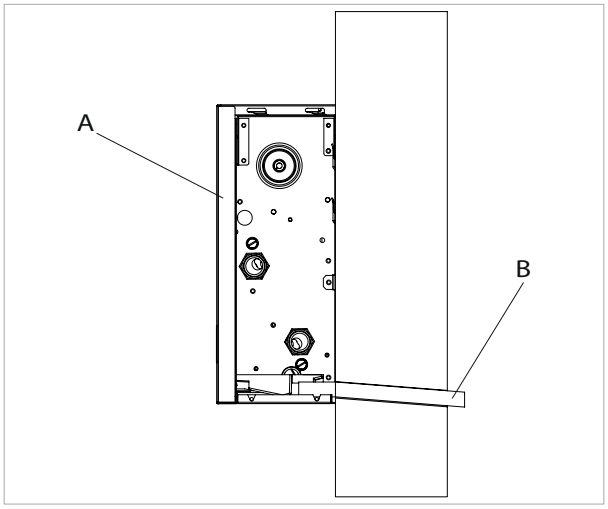

A. Unit
B. Liquid drain pipe

- Provide a slope never less than 1°
- Insulate fitting points

CAUTION

PAY ATTENTION TO THE ANGLE OF THE CONDENSATE DRAIN PIPE.

CAUTION

USE PLASTIC DRAINAGE PIPES.

CAUTION

AVOID PIPES MADE OF METALLIC MATERIAL.

CAUTION

MAKE SURE ALL JOINTS ARE SEALED TO PREVENT LEAKAGE OF WATER.

CAUTION

CONDENSATE DRAINAGE PIPES MUST BE INSULATED FOR BOTH INDOOR AND OUTDOOR SECTIONS OF THE HOUSE TO AVOID CONDENSATION ON THE SURFACE AND/OR FREEZING PROBLEMS.

If using a tank for collecting the condensation:

CAUTION

AVOID THE HERMETIC CLOSURE OF THE CONTAINER.

CAUTION

PREVENT THE END OF THE DRAINAGE TUBE FROM FALLING BELOW THE WATER LEVEL.

If draining into the sewage system:
If local plumbing codes permit, and when discharging directly into the main drains, it is advisable to make a siphon to prevent bad smells returning up the pipe towards the room. The curve of the siphon must be lower than the condensation collection bowl. Refer to local plumbing codes.

The trap must feature a plug in its lower part or must otherwise allow for quick disassembly for cleaning purposes.

Install a pump if the drain pipe is higher than the lower level of the collection pan.

If using an open drain:
Make the condensate liquid flow directly onto a gutter or into a “rainwater” drain.

If the condensate is not collected, it will be deposited on the support surface. The water could freeze if the outdoor temperatures are below 32°F (0°C), thus creating a hazard. In this case, appropriate barriers should be installed in order to prevent people from approaching the area.

After piping work is complete, gradually pour 1 quart (approx. 1 L) of water into the drain pan to check proper drainage.

3.9.3 Check

After the installation is completed:

- Pour water very slowly into the condensate drain pan
- Check for correct condensate drainage

3.10 Filling the System

To fill the system:

- Open the vent valves
- Open all the system's shut-off devices
- Slowly introduce the water supply

When water begins to leak out of the vent valves:

- Close the vent valves
- Complete system filling
- Verify that you have reached the nominal pressure for the system
- Isolate the water supply
- Check the tightness of the gaskets

CAUTION

IT IS RECOMMENDED TO REPEAT THIS OPERATION AFTER THE DEVICE HAS BEEN RUNNING FOR A FEW HOURS.

CAUTION

REGULARLY CHECK THE SYSTEM'S PRESSURE.

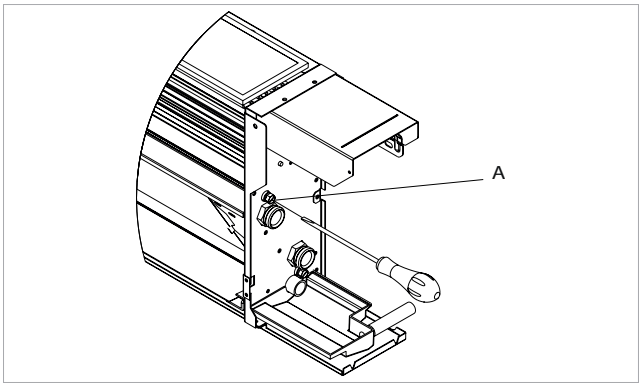

A. Air bleeder

3.11 Electrical Connections

WARNING

- ONLY USE COPPER WIRES.
- MAKE SURE THE FIELD WIRING COMPLIES WITH THE LATEST EDITION OF NFPA 70, NATIONAL ELECTRIC CODE.
- INSTALLATION MUST COMPLY WITH THE LATEST EDITION OF NATIONAL, STATE, AND LOCAL CODES.
- ALL FIELD WIRING MUST BE PERFORMED IN ACCORDANCE WITH THE WIRING DIAGRAM SUPPLIED WITH THE PRODUCT.
- NEVER SQUEEZE BUNDLED CABLES AND MAKE SURE THEY DO NOT COME IN CONTACT WITH THE PIPING AND SHARP EDGES. MAKE SURE NO EXTERNAL PRESSURE IS APPLIED TO THE TERMINAL CONNECTIONS.
- MAKE SURE TO INSTALL GROUND WIRING, DO NOT GROUND THE UNIT TO A UTILITY PIPE, SURGE ABSORBER, OR TELEPHONE GROUND. INCOMPLETE GROUND MAY CAUSE ELECTRICAL SHOCK.

The device leaves the factory fully wired and needs only the connection to the power supply, to any controls and accessories.

For the size of the power supply cable and safety devices, use the following table.

Models	u.m.	FWXT03	FWXT05	FWXT07
Power Conductor (Line + Ground)	AWG (mm²)	16 (1.5)	16 (1.5)	16 (1.5)
Protective Conductor Section on Ground	AWG (mm²)	16 (1.5)	16 (1.5)	16(1.5)
Internal protective fuse on PCB	A	2	2	2

1. N.B. The values indicated refer to a maximum line length of 49 ft (15m).

Make sure that:

- The characteristics of the electric network are adapted to the absorption of the apparatus, considering also any other devices in parallel operation.
- The power supply voltage and system frequency match the values indicated on the device's plate data.
- The cables must be appropriate for the type of installation in accordance with the applicable codes and standards.
- The disconnection device is located in an easily accessible place in order to be able to intervene in the event of an emergency.

It is required:

- Provide a suitable grounding connection.
- The use of a dedicated main switch fitted with time-delay fuse or with an automatic circuit breaker switch, installed near the device.

WARNING

THE DEVICE IS EQUIPPED WITH SUPPRESSION FILTER AS REQUIRED BY THE APPLICABLE CODES AND STANDARDS. USE SELECTIVE CIRCUIT BREAKERS TO COMPENSATE FOR THE MICRO-DISPERSION ON THE GROUNDING OF THIS DEVICE.

WARNING

IT IS FORBIDDEN TO USE GAS OR WATER PIPES FOR GROUNDING THE APPLIANCE.

WARNING

ANY REPLACEMENT OF THE POWER CABLE MUST BE CARRIED OUT BY AUTHORIZED PERSONNEL AND IN ACCORDANCE WITH THE APPLICABLE NATIONAL, STATE AND LOCAL CODES.

WARNING

DISCONNECT THE MAIN CIRCUIT BREAKER BEFORE MAKING ANY ELECTRICAL CONNECTIONS AND PERFORMING MAINTENANCE ON THE EQUIPMENT.

3.11.1 Access to the terminal block

WARNING

Before carrying out any work, please ensure the power supply is disconnected.

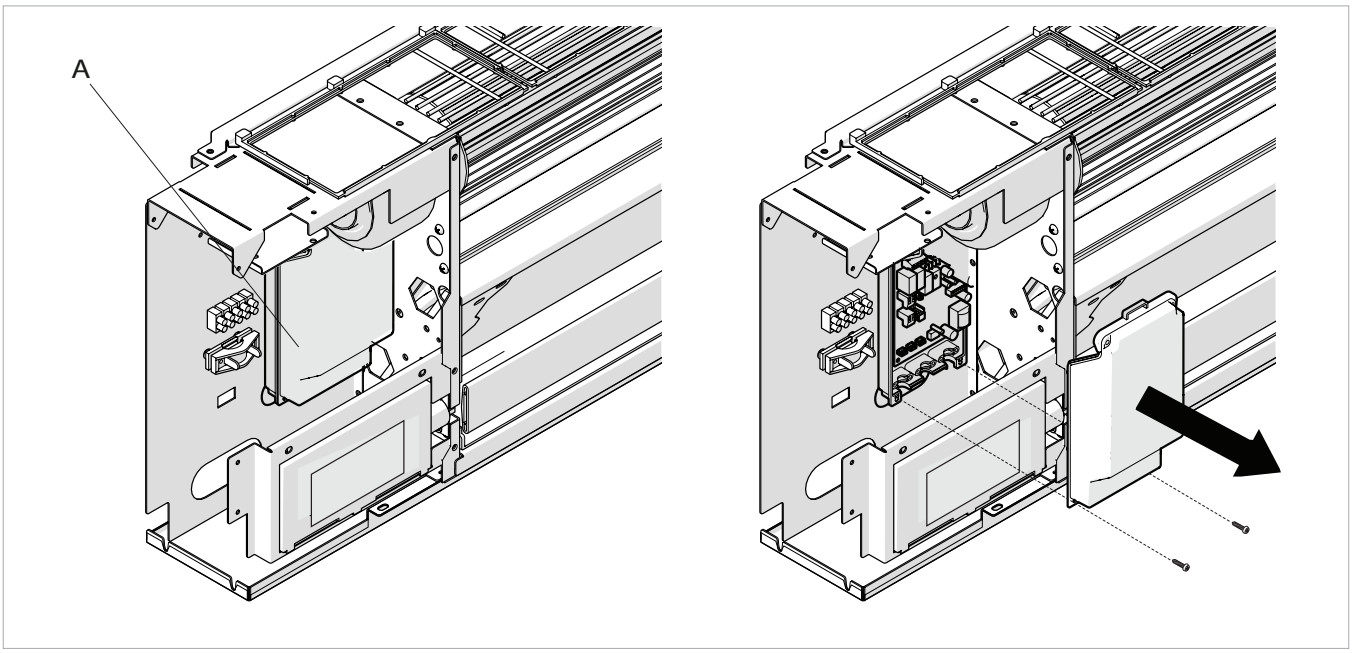

A. Terminal block for wiring

To connect the power supply:

- Bring the power cord to the terminal block
- Make the connections
- Refer to the information in the wiring diagram of the unit you are installing

You can use a cable embedded in the wall in the position traced with the installation template to make the electrical connection (recommended connection for devices installed in the upper part of the wall). In any case, you must check that the power supply is protected against overload and/or short-circuits.

4. Touchpad and Remote Control

4.1 Interface

The touchpad control is supplied on board the machine, does not require connections, and allows to:

- Show the operating status
- Show any alarms
- Select the various functions

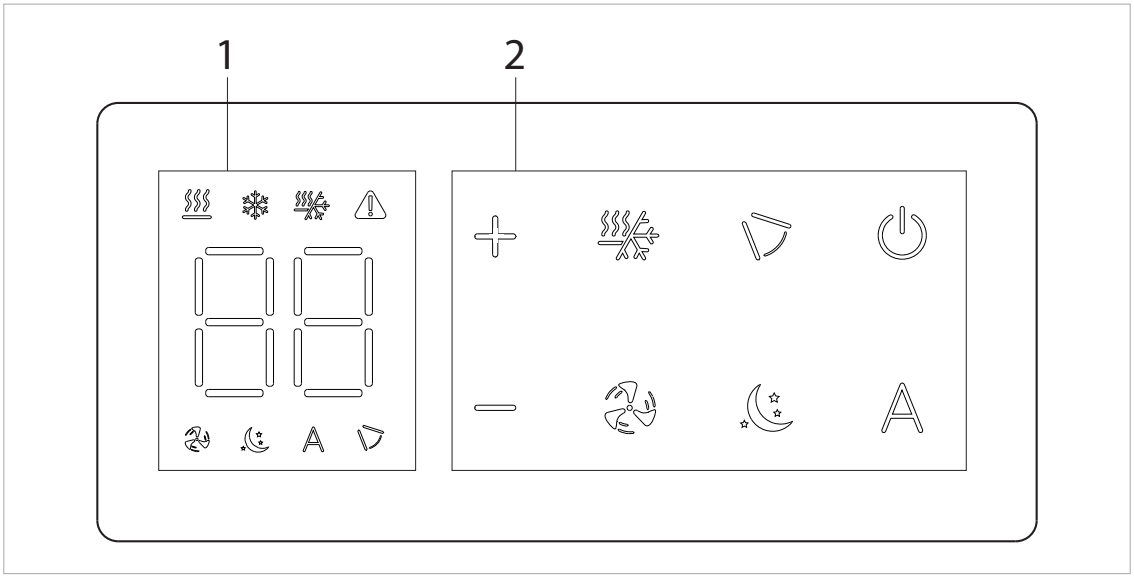

1.Display area
2. Keys area

4.2 Installation

4.2.1 Description

M7 on-board control, with continuous modulation thermostat and remote control.

WARNING

- **INGESTION HAZARD: This product contains a button cell or coin battery.**
- **DEATH or serious injury can occur if ingested.**
- **A swallowed button cell or coin battery can cause Internal Chemical Burns in as little as 2 hours.**
- **KEEP new and used batteries OUT OF REACH of CHILDREN.**
- **Seek immediate medical attention if a battery is suspected to be swallowed or inserted inside any part of the body.**



N400762A _rev.00

4.2.2 CP presence contact input connection

Through this device it is possible to connect an external control signal that inhibits the operation of the control signal, for example:

- Opening window contact
- Remote on/off
- Infrared presence sensor
- Activation badge
- Remote change of season

Function

The contact is normally open (NO).

- When closing the CP contact, connected to a potential-free contact, the device switches to standby mode
- At the touch of a button on the display the symbol ⚠ flashes.

WARNING

It is forbidden to connect the CP input to that of another unit electronic board. Use separate contacts.

The CP presence contact can be configured for heating and cooling operation via the “To select digital input” P. 25 settings menu item (digital input).

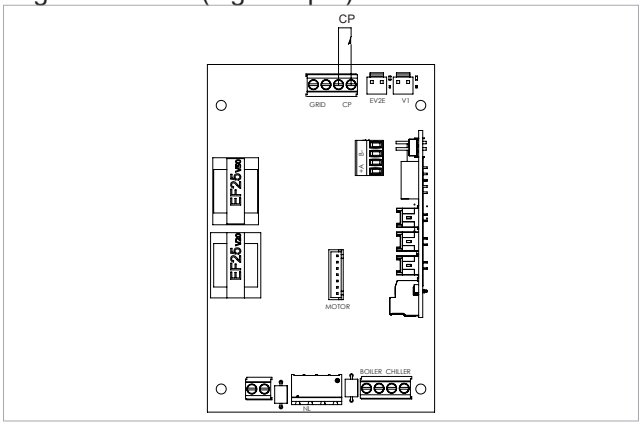

CP. Presence contact

4.3 Connection Diagram

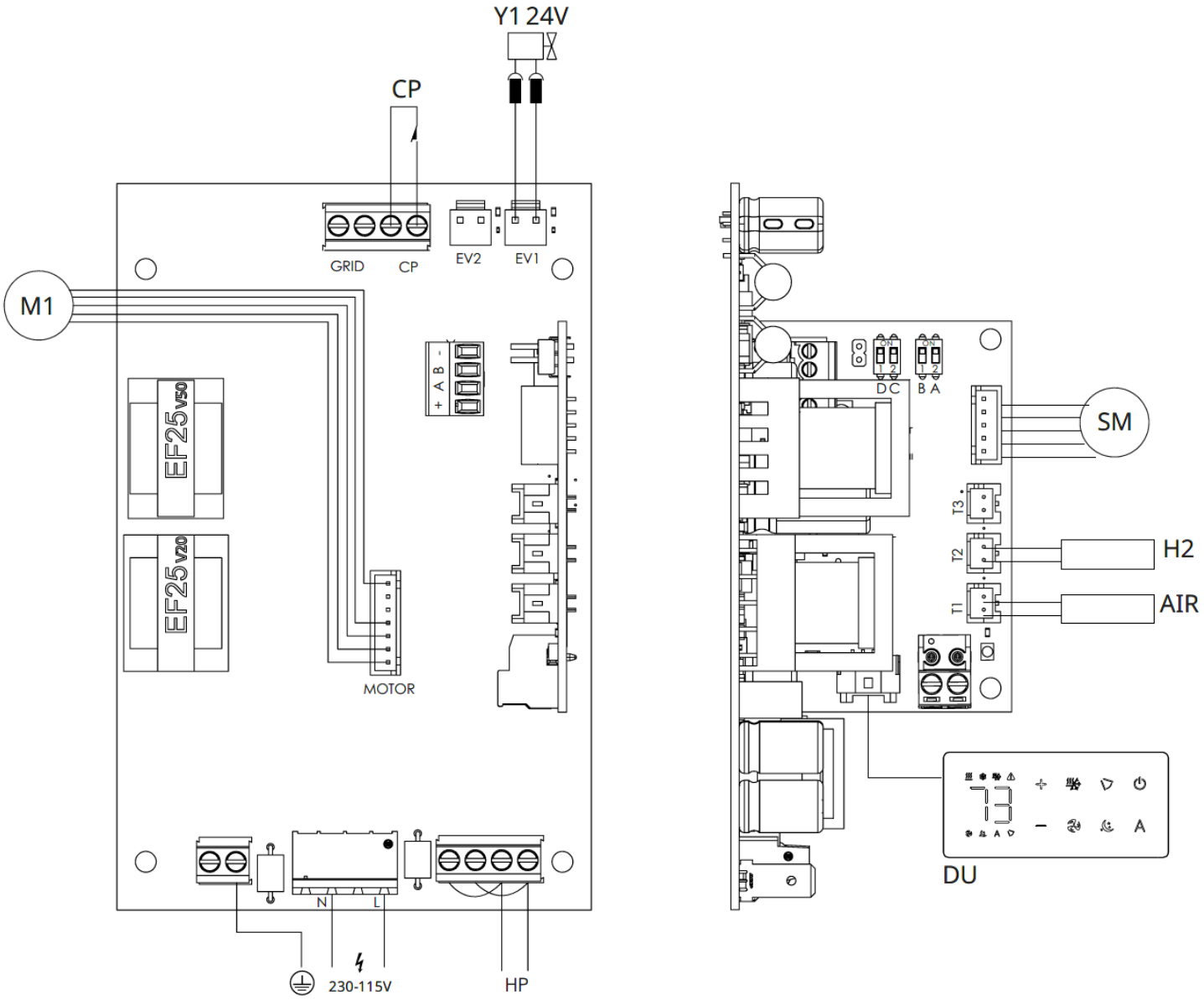

M1	**DC fan motor**
⏚	**Ground connection**
SM	**Step Motor**
230-115V.	**Power supply connection**
HP	**Contact request cooling/heating generator (e.g. heat pump)**
DU	**Touchpad**
AIR	**Air temperature probe**
H2	**Water temperature probe**
Y1	**Water solenoid valve 24 V**
CP	**Presence contact**

Through the water temperature probe H 2 (10 kΩ) located in the thermowell on the unit's coil, the temperature setpoints for fan stop are controlled:

- Minimum water temperature in heating mode 86°F (30°C).
- Maximum water temperature in cooling mode 68°F (20°C).

NOTE: The printed circuit board provides for operation without a water probe. In this case, the fan stop thresholds are ignored.

4.4 Functions
The keys of the remote control and touch-screen display perform the same function.

4.4.1 Basic menu
To access the basic menu
- With the display off, hold ⏻ down for 10 seconds
  The device turns on and on appears.
- Keep pressed until the indication in appears
- Release the ⏻ key
  The symbol ot appears.

To navigate in the menu
- Use the icons + −

To select a menu item and to confirm the changes made
- Press the icon ⏻
  Confirming the change takes you to the next item.

To exit the menu
- Press the icon ⏻ for 10 seconds
- Or wait 30 seconds the automatic shutdown

Menu items
ot: AIR probe offset (air probe setting)
CF: Scale
ub: Buzzer volume
uu: Not used
uP: Not used
Set AIR probe offset

NOTE: The set value changes by 1 °F/°C each press of the + and − buttons.

To set the air probe offset
If the unit is very high on the wall, you may need an offset to read the same temperature between the floor and the air probe on the unit.
- Select ot
- Press ⏻ to change settings
- Increase or decrease the value with the icons + −
- Press ⏻ to confirm
  By default it is set to 0.
  The setting range is from -9 °F/°C to +9 °F/°C.

WARNING

USE THIS ADJUSTMENT CAREFULLY. THIS ADJUSTMENT MUST BE CARRIED OUT ONLY AFTER HAVING FOUND ACTUAL DEVIATIONS FROM THE ROOM TEMPERATURE USING A RELIABLE TOOL. ADJUST THE VALUE. AFTER 30 SECONDS FROM THE LAST ACTION THE CONTROL GOES OUT AND THE SETTINGS IS MEMORIZED.

Set Room Temperature
To set the room temperature setpoint:
- Increase or decrease the value with the icons + −
  The adjustment range goes from 60 to 82°F (16 to 28°C), with a resolution of 1 °F/°C.
- Out of range values from 41 to 104°F (5 to 40°C) are allowed, except in automatic mode. These value should be set only for short periods of time.

Scale

To change the temperature unit of measure
- Select CF
- Press ⏻ to change settings
- Select °C or °F
- Press ⏻ to confirm
  By default the temperature unit of measure is °F.

Adjusting buzzer volume

To change the volume
- Select Ub
- Press ⏻ to change settings
- Increase or decrease the value with the icons + −
- Press ⏻ to confirm
  The volume setting range is from 00 (min) to 03 (max).

NOTE: The volume changes after confirming the modification.

4.4.2 Advanced menu
NOTE: To access the setup menu, it is necessary to access the Basic menu. See section “Basic menu” p. 24.

The special functions menu can be accessed via the control panel.

To access the advanced menu
- From the basic menu press A
  Appears 00.
- Press the + key once
  Appears 01.
- Press ⏻ to confirm and log in
  This takes you to the settings menu.

To navigate in the menu
- Use the icons + −

To select a menu item and to confirm the changes made
- Press ⏻ for 2 seconds
  Confirming the change takes you to the next item.

To exit the menu
- Press for ⏻ about 10 seconds
  Appears Rd.
- Press ⏻ for about 10 seconds
  The display turns off.
- Or wait 30 seconds after the last action
  The display is switched off automatically.

NOTE: After 30 seconds from the last action the control returns to the start screen and the last chosen values are recorded.

Menu items
Ad: Not used
of: Options for digital input
UC: Not used
Ac: Anti-stratification in cooling
Ah: Anti-stratification in heating
Fr: Not used

To select digital input

To change the digital input

- Select di
- Press ⏻ to change settings
- Select CP for presence contact (default)
- Select CO to cooling open
- Select CC to cooling close
- Press ⏻ to confirm
  By default digital input is set to CP.

For return to the default settings, set the digital input to "CP".

By selecting one of the other inputs (CO,CC) the seasonality is locked. It is not possible to modify it through the key ❄☀ of the control.

Set the anti-stratification function to cooling

To set the anti-stratification function in cooling mode

- Select Ac
- Press ⏻ to change settings
  Appears no.
- Press ✢ to move within the menu
- Select YS to enable the function
- Press ⏻ to confirm changes
  By default, the anti-stratification function in cooling is set to no.

NOTE: The anti-stratification function in cooling is to be set for appliances installed at low floor level equipped with an active air probe.

Set the anti-stratification function in heating mode

To set the anti-stratification function in heating mode

- Select Ah
- Press ⏻ to change settings
  Appears no.
- Press ✢ to move within the menu
- Select YS to enable the function
- Press ⏻ to confirm changes
  By default, the anti-stratification function in heating is set to on.

NOTE: The anti-stratification function in heating is to be set for appliances installed high up on the wall or ceiling equipped with an active air sensor.

4.4.3 Error signals
The PCB has a status LED.

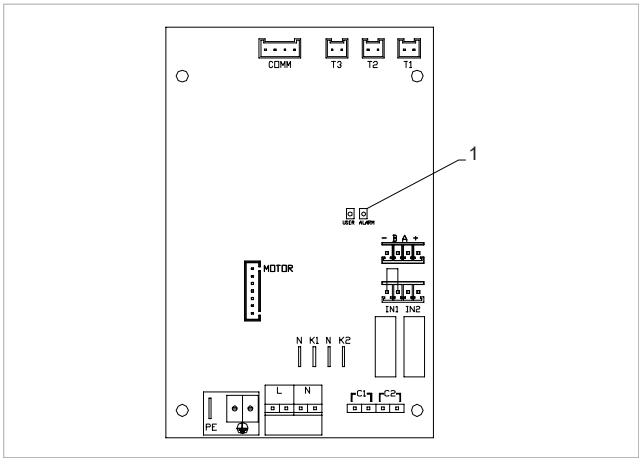

1. LED

NOTE: The flashing LED indicates errors.

It is possible to verify the meaning of the LEDs by means of the error code displayed on the touchpad.

To identify the error, please refer to "Visualization of alarms on display" p. 25.

With the LED on and no indication on the display, it is indicated that there are no errors.

4.4.4 Visualization of alarms on display
In the event of a malfunction, the display shows an alarm code.

In the event of an alarm, the device still maintains active functions.

- E1 - Room temperature probe AIR /T1 disconnected or faulty
  None of the modes can be activated.
- E2 - Faulty internal fan motor or disconnected
  None of the modes can be activated.
- E3 - Water temperature probe H2/T2 disconnected or faulty
  None of the modes can be activated.
- CE - Communication error
  Errors in the communication between the touchpad control and the board. None of the modes can be activated.
  The ⚠ symbol appears to indicate unsuitable radiant water.
- ♨ Symbol - Incorrect water temperature
  In heating mode, the water temperature is below 86°F (30°C).

- ❄ Symbol - Incorrect water temperature
  In cooling mode, the water temperature is above 68°F (20°C).

5. Maintenance

NOTE: Routine maintenance is essential to keep the device efficient, safe, and reliable over time.

5.1 Preliminary Warnings

WARNING

BEFORE EACH CLEANING AND MAINTENANCE INTERVENTION:
- ISOLATE AND LOCK OFF THE MAIN SUPPLY, POSTING A NOTICE INDICATING THAT WORK IS BEING CARRIED OUT.
- WAIT FOR THE COMPONENTS TO COOL DOWN IN ORDER TO AVOID ANY BURNS.

WARNING

CARRYING OUT ANY TECHNICAL OR CLEANING WORK BEFORE DISCONNECTING THE UNIT FROM THE POWER SUPPLY IS FORBIDDEN.

WARNING

MAKE SURE THAT THERE IS NO VOLTAGE BEFORE SERVICING.

WARNING

AFTER COMPLETING THE MAINTENANCE WORK, THE UNIT MUST BE RESTORED TO ITS ORIGINAL CONDITION.

WARNING

- DO NOT LEAN OR SIT ON THE FANCOIL TO AVOID DAMAGING THE APPLIANCE.
- DO NOT MANUALLY MOVE THE HORIZONTAL LOUVER OF THE AIR OUTLET. ALWAYS USE THE REMOTE CONTROL TO DO THIS OPERATION.
- IF WATER LEAKS FROM THE DEVICE, YOU MUST SWITCH IT OFF IMMEDIATELY AND DISCONNECT THE POWER SUPPLY. THEN, CALL THE NEAREST CUSTOMER SERVICE CENTER.
- THE DEVICE MUST NOT BE INSTALLED IN ROOMS WHERE THERE ARE EXPLOSIVE GASES OR WHERE THERE ARE CONDITIONS OF HUMIDITY AND TEMPERATURE OUT OF THE LIMITS DEFINED IN THE INSTALLATION MANUAL. REFER TO PAGE 26.
- CLEAN THE FILTER REGULARLY.

5.2 Routine Maintenance

The routine maintenance plan includes the following cleaning operations.

Carry out cleaning:
- Every six months

WARNING

BEFORE EACH CLEANING AND MAINTENANCE INTERVENTION:
- DISCONNECT THE DEVICE FROM THE POWER SUPPLY BY TURNING THE SYSTEM MAIN SWITCH TO "OFF".

WARNING

WAIT FOR THE COMPONENTS TO COOL DOWN IN ORDER TO AVOID ANY BURNS.

WARNING

AFTER COMPLETING THE MAINTENANCE WORK, THE UNIT MUST BE RESTORED ITS ORIGINAL CONDITION.

WARNING

IT IS FORBIDDEN TO OPEN THE ACCESS DOORS AND CARRY OUT ANY TECHNICAL OR CLEANING INTERVENTION, BEFORE HAVING DISCONNECTED THE DEVICE FROM THE MAINS SUPPLY BY ISOLATING AND LOCKING OFF THE MAIN SUPPLY, AND POSTING A NOTICE INDICATING THAT WORK IS BEING CARRIED OUT.

WARNING

- DO NOT LEAN OR SIT ON THE FANCOIL TO AVOID DAMAGING THE APPLIANCE.
- DO NOT MANUALLY MOVE THE HORIZONTAL LOUVER OF THE AIR OUTLET. ALWAYS USE THE REMOTE CONTROL TO DO THIS OPERATION.
- IF WATER LEAKS FROM THE DEVICE, YOU MUST SWITCH IT OFF IMMEDIATELY AND DISCONNECT THE POWER SUPPLY. THEN, CALL THE NEAREST CUSTOMER SERVICE CENTER.
- THE DEVICE MUST NOT BE INSTALLED IN ROOMS WHERE THERE ARE EXPLOSIVE GASES OR WHERE THERE ARE CONDITIONS OF HUMIDITY AND TEMPERATURE OUT OF THE LIMITS DEFINED IN THE INSTALLATION MANUAL. REFER TO PAGE 26.
- CLEAN THE FILTER REGULARLY.

5.3 Six-Monthly Operations

5.3.1 External cleaning

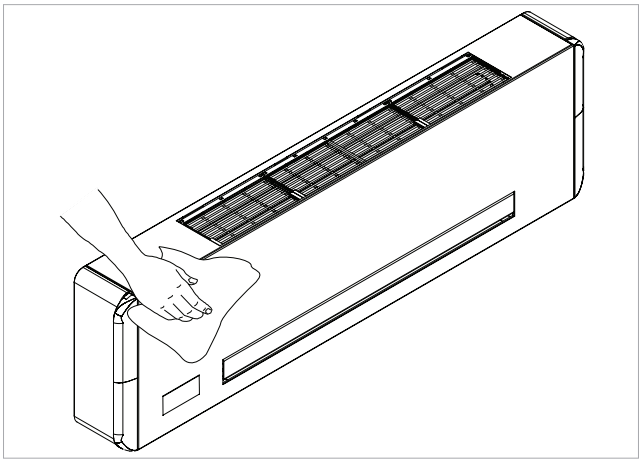

Clean the external surfaces using a soft cloth dampened with water.

CAUTION

Do not use abrasive sponges, or abrasive or corrosive detergents, as you might damage the painted surface.

WARNING

Disconnect the unit from the power supply before each cleaning and maintenance intervention by setting the main power supply switch to off.

5.3.2 Air intake filter cleaning

Cleaning the filter must be carried out:

- After prolonged operation, consider the concentration of impurities in the air.
- When you plan to restart the system after prolonged disuse.

Filter extraction

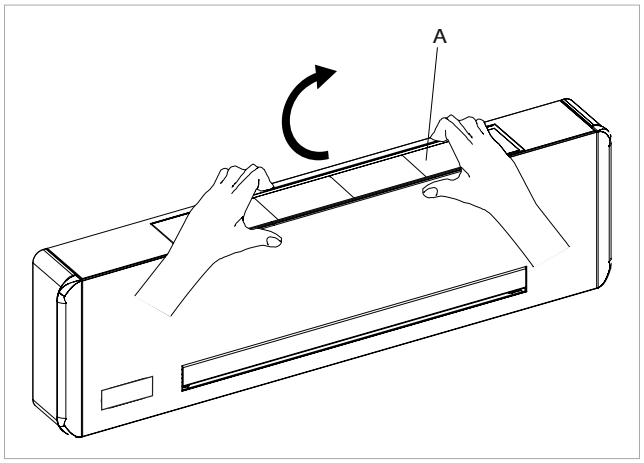

A. Filter

To extract the filter:

- Lift it slightly
- Rotate until it's completely removed from the housing

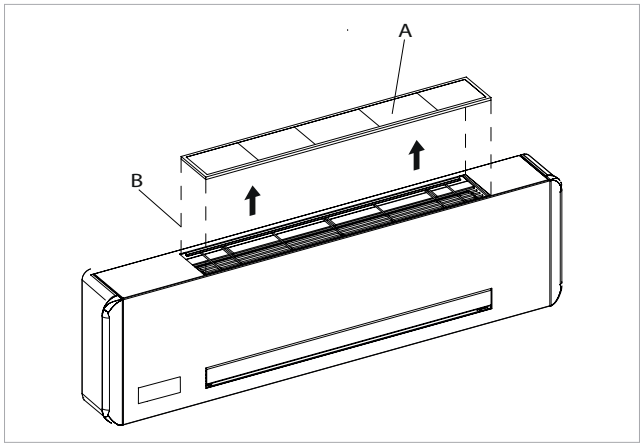

A. Filter
B. Extraction direction

- Remove the filter

Cleaning

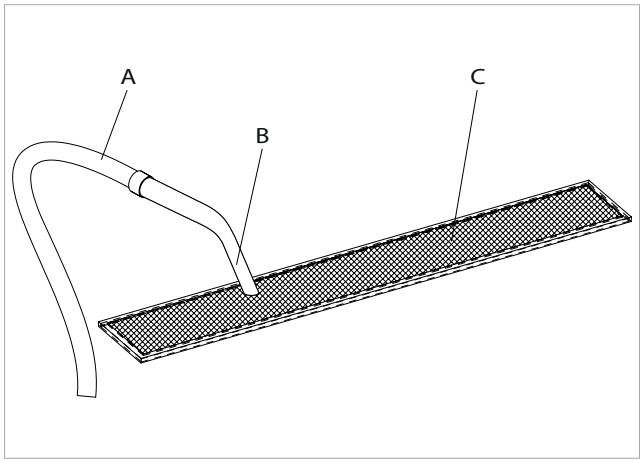

A. Vacuum cleaner
B. Long nozzle
C. Filter

To clean the filters:

- Use a vacuum cleaner to remove dust from filter.

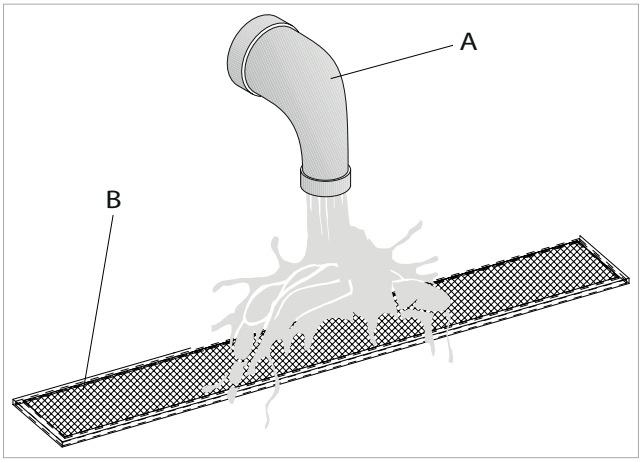

A. Running Water
B. Filter

- Wash the filter with running water without using detergents or solvents and leave to dry.

CAUTION

DO NOT USE DETERGENTS OR SOLVENTS TO CLEAN THE FILTER.

Inserting the filter

Remount the filter paying particular attention to introduce the lower flap in its housing.

CAUTION

AFTER FILTER CLEANING CHECK IF THE PANEL IS PROPERLY MOUNTED.

CAUTION

THE DEVICE FEATURES A SAFETY SWITCH THAT PREVENTS THE FAN FROM STARTING IF THE MOBILE PANEL IS INCORRECTLY MOUNTED OR THE FILTER IS MISSING.

CAUTION

DO NOT USE THE DEVICE WITHOUT ITS MESH FILTER. IT IS FORBIDDEN TO USE THE DEVICE WITHOUT ITS MESH FILTER.

5.4 Suggestions for Energy Saving

For a correct operation of the device and a greater energy saving:

- Keep the filters clean.
- Keep the doors and windows of the locations fitted with air conditioning systems closed as much as possible.
- Limit exposure to direct sunlight in the rooms to be air-conditioned by means of external screens (projections, curtains, shutters, etc.).

6. Troubleshooting

CAUTION

In case of water leaks or anomalous functioning, immediately cut off the power supply and close the water taps.

6.1 Preliminary Warnings

Should you encounter any of the anomalies below:

- The ventilation does not start even if the water circuit is filled with hot or cold water
- The device is losing water in heating mode
- The device is losing water in cooling mode
- The device generates excessive noise
- There is dew on the front panel

Follow the instructions below:

- Immediately disconnect the device from power supply
- Isolate the water supply
- Immediately contact a qualified service technician or suitably qualified personnel

WARNING

The interventions must be carried out by a qualified installer or by an Authorized Service Center. Do not intervene personally.

6.2 Troubleshooting Table

Effect	Cause	Solution
The ventilation is delayed with respect to the new temperature or function settings.	The circuit valve requires a certain time to open and therefore to make the hot or cold water circulate inside the device.	Wait 2 or 3 minutes to allow the circuit valve to open.
The device does not activate the ventilation.	Cold or hot water is missing from the system.	Ensure the heating or cooling source is on.
The ventilation does not start even if the water circuit is filled with hot or cold water.	The hydraulic valve stays closed.	Demount the body of the valve and check if the water circulation is restored.
		Check the valve operation, feeding it separately from a 24 V supply. If it operates, the problem may be in the electronic control.
	The ventilation motor is jammed or burnt.	Check the motor windings and check if the fan rotates freely.
	The micro switch that stops the ventilation when the filter grill is opened does not close properly.	Check that the closure of the grill activates the micro switch contact.
	The wirings are not correct.	Check the electrical connections.
The device is losing water in heating mode.	Leaks at the hydraulic connections of the system.	Check the leak and tighten the connection.
	Losses in the valve group.	Check the condition of the gaskets.
There is dew on the front panel.	Detached thermal insulation.	Check the correct positioning of the thermal and acoustic insulations paying particular attention to the front one located on top of the finned coil.
There are water drops on the air vent.	High humidity conditions (>60%) might generate condensation, especially at minimum ventilation speeds.	As soon as the level of relative humidity drops, the phenomena disappears. However, a few water drops falling inside the device will not cause any malfunction.
The device is losing water in cooling mode.	The condensate tray is clogged.	Slowly pour water in the lower section of the coil to check the drainage; if necessary clean the tray and/ or improve the slope of the drain pipe.
	The condensate discharge pipe does not have the slope required for correct drainage.	
	The connection pipes and the valves unit are not well insulated.	Check the pipe insulation.
The device generates excessive noise.	The fan touches the structure.	Verify
	The fan is unbalanced.	The unbalancing generates excessive machine vibrations: replace the fan.
	Check the filters for dirt and clean them if necessary	Clean filters

7. Technical Information

COOLING PERFORMANCE (W 44.6/53.6°F(7/12°C), A 80.6°F(27°C))

Models		u.m.	FWXT03	FWXT05	FWXT07
Total cooling capacity	(1)	Btu/h	4231	5494	6620
		kW	1.24	1.61	1.94
Sensible cooling capacity	(1)	Btu/h	3344	4334	5187
		kW	0.98	1.27	1.52
Latent cooling capacity	(1)	Btu/h	887	1160	1433
		kW	0.26	0.34	0.42
Water flow	(1)	ft³/h	7.49	9.75	11.72
		L/h	212	276	332
Pressure drop	(1)	psi	1.7	0.73	0.77
		kPa	11.70	5.05	5.30

HEATING PERFORMANCE (W 113/104°F(45/40°C), A 68°F(20°C))

Models		u.m.	FWXT03	FWXT05	FWXT07
Heating capacity	(2)	Btu/h	5118	6858	8019
		kW	1.50	2.01	2.35
Water flow	(2)	ft³/h	9.36	12.5	14.62
		L/h	265	354	414
Pressure drop	(2)	psi	2.36	1.04	1.17
		kPa	16.30	7.20	8.10

HYDRAULIC DATA

Models		u.m.	FWXT03	FWXT05	FWXT07
Coil water content		Gal	0.13	0.16	0.2
		L	0.50	0.61	0.77
Maximum operating pressure		psi	145	145	145
		bar	10	10	10
Hydraulic connection via NPT adapter		in	1/2		
Max. inlet water temperature		°F	176	176	176
		°C	80	80	80
Min. inlet water temperature		°F	39	39	39
		°C	4	4	4

AERAULIC DATA

Models		u.m.	FWXT03	FWXT05	FWXT07
Air flow at the maximum fan speed	(3)	CFM	134	195	259
		m^3/h	228	331	440
Air flow at the medium fan speed		CFM	91	135	167
		m^3/h	155	229	283
Air flow at the minimum fan speed		CFM	49	73	81
		m^3/h	84	124	138
Static pressure available		in H_2O	0.04	0.04	0.04
		Pa	10	10	10

ELECTRICAL DATA

Models		u.m.	FWXT03	FWXT05	FWXT07
Power supply		V / ph / Hz	115 / 1 / 60 230 / 1 / 60	115 / 1 / 60 230 / 1 / 60	115 / 1 / 60 230 / 1 / 60
Electrical power absorption at maximum fan speed		W	19	20	29
Maximum absorbed current		A	0.2 0.10	0.24 0.12	0.32 0.16
Electrical power absorption at minimum fan speed		W	5	5	5

SOUND DATA

Models		u.m.	FWXT03	FWXT05	FWXT07
Maximum sound power level	(4)	dB(A)	53	54	55
Sound pressure level at maximum air flow	(5)	dB(A)	40	41	42
Sound pressure level at medium air flow	(5)	dB(A)	33	34	34
Sound pressure level at minimum air flow	(5)	dB(A)	25	25	26

WEIGHT

Models		u.m.	FWXT03	FWXT05	FWXT07
Weight		lb	30.86	35.27	41.89
		kg	14	16	19

1. Water temperature: 44.6°F / 53.6°F (7°C / 12°C); Air temperature: 80.6°F (27°C) DB and 66.2°F (19°C) WB, measured according to EN 1397.
2. Water temperature: 113°F / 104°F (45°C / 40°C); Air temperature: 68°F (20°C) DB and 59°F (15°C) WB, measured according to EN 1397.
3. Airflow measured with clean filters.
4. Sound power measured according to EN 16583.
5. Sound pressure measured at a distance of 39.4 inches (1 m) in accordance with ISO 7779.

8. Installation Template

NOTE: The units are supplied with a paper template for marking the holes necessary for installation. All the dimensions on this template are in mm.

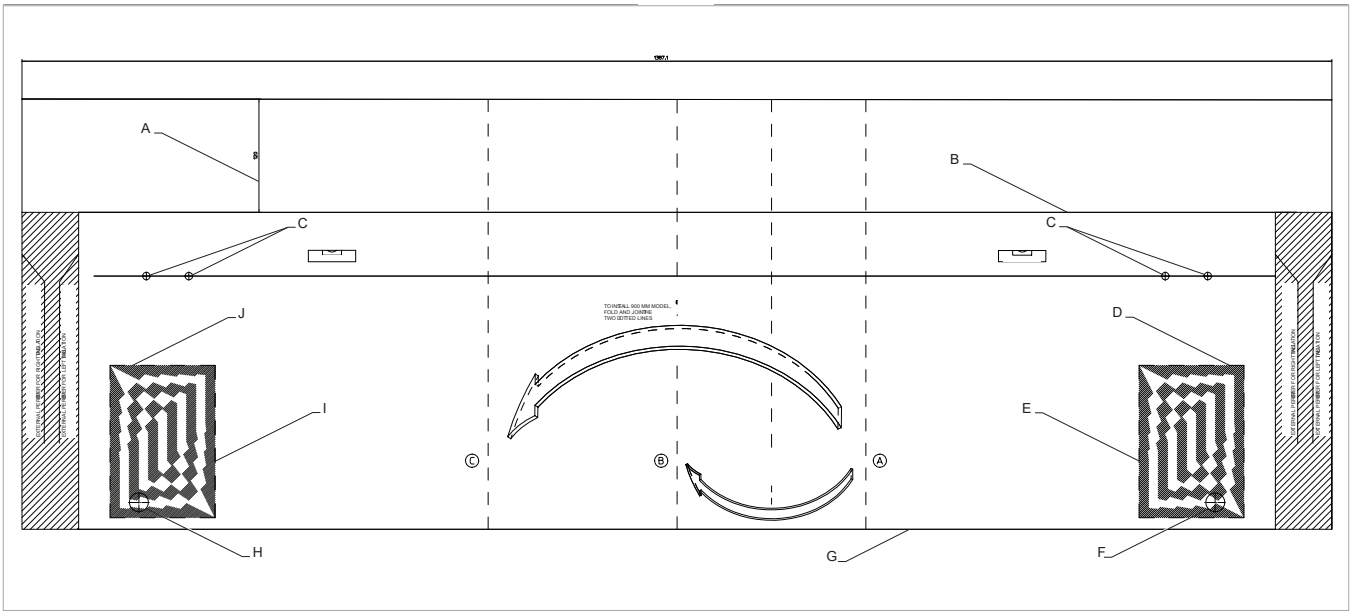

A. Minimum distance to the ceiling = 4.72 in (120 mm)
B. Top perimeter of the unit
C. Holes 5/16 in (8 mm) for dowels
D. Hydraulic connections for right-hand installation
E. Electrical connections for left-hand installation
F. Condensate drain for hydraulic connections on the right
G. Lower perimeter of the machine
H. Condensate drain for hydraulic connections on the left
I. Electrical connections for right-hand installation
J. Hydraulic connections for left-hand installation

PAGE IS LEFT INTENTIONALLY BLANK.

PAGE IS LEFT INTENTIONALLY BLANK.

PAGE IS LEFT INTENTIONALLY BLANK.

CUSTOMER FEEDBACK
Daikin is very interested in all product comments.
Please fill out the feedback form on the following link:
https://daikincomfort.com/contact-us
You can also scan the QR code on the right to be directed to the feedback page.

P/N: IO-7039

N421227A

Our continuing commitment to quality products may mean a change in specifications without notice.

© 2025 Daikin Comfort Technologies Manufacturing, Inc.
19001 Kermier Rd., Waller, TX 77484
www.daikincomfort.com