DHC Commercial

R-32 High-Efficiency Air Conditioner
Packaged Rooftop Unit
DHC Commercial
7.5 - 12.5 Nominal Tons

Up to 17.5 IEER / 12.5 EER

5 YEAR PARTS LIMITED WARRANTY

Intertek

AHRI CERTIFIED www.ahridirectory.org Unitary Small AC AHRI Standard 210/240

ISO 9001 GLOBAL QUALITY STANDARDS

ISO 14001 CERTIFIED ENVIRONMENTAL MANAGEMENT SYSTEM

R32

* Complete warranty details available from your local distributor or manufacturer's representative or at www.daikincomfort.com or www.daikinac.com

Supersedes 02/25

Our Perfect Package:

Harnessing energy-efficient performance, proven technology, and enhanced comfort for life.

Since becoming the first company in Japan to manufacture packaged air conditioning systems, in 1951, Daikin has supported comfortable indoor living based on the strengths and technologies that have led to the growth of the company becoming one of the world's largest manufacturers of HVAC products, systems and refrigerants.

Today, as a comprehensive global manufacturer of HVAC products and systems, the Daikin brand is committed to being recognized as a truly global and excellent company capable of continually creating new value for its customers. The company plans to pursue sustainable growth and foster business operations that consistently harmonize with the goals of improving indoor comfort.

The group philosophy of the company includes:

- Creating new value continuously for customers
- Developing world leading energy-saving technology
- Being a flexible and dynamic organization
- Allowing employees to be the driving force for the success of the company
- Fostering an atmosphere of best practices, boldness, and innovation
- Thinking and acting globally

Contents

2	**Introduction**	2
4	**Nomenclature**	4
5	**Features and Benefits**	5
	Applications	8
	Serviceability	8
9	**Product Specifications**	9
	Coil Dimension	13
	AHRI Ratings	13
	Sound Data	13
14	**Dimensional Data**	14
15	**Expanding Cooling Data**	15
23	**Electric Heating Data**	23
24	**Air Flow**	24
40	**DDC Air Flow**	40
55	**Static Pressure**	55
56	**Electrical Data**	56
74	**Wiring Diagrams**	74
80	**Electrical Connections**	80
	Unit Clearances	80
81	**Installation**	81
	Weights	81

For details on accessories refer to document **PM-LC-ACCESSORIES**

Nomenclature

D	H	C	120	7	S	400	C	A	A	X	X	X	X	X	X	X	X	A	*
1	2	3	4,5,6	7	8	9,10,11	12	13	14	15	16	17	18	19	20	21	22	23	24

Revision Levels
Major & Minor

Brand
D Daikin

Configuration
S R 32 Standard Efficiency
H R 32 High Efficiency

Application
C Cooling
G Gas Heat
H Heat Pump

Nominal Cooling Capacity

036	3 Tons	102	8½ Tons
048	4 Tons	120	10 Tons
060	5 Tons	150	12½ tons
072	6 Tons	180	15 Tons
090	7½ Tons	240	20 Tons
		300	25 Tons

Voltage

1	208-230/1/60	4	460/3/60
3	208-230/3/60	7	575/3/60

Supply Fan/Drive Type/Motor
D Direct Drive - Standard Static
L Direct Drive -Medium Static
W Direct Drive - High Static

Nominal Heating Capacity

AC Field and Factory-Installed Electric Heat				Electric Heat w/ SCR controls			
045	45,000 BTU/h	240	240,000 BTU/h	S05	5kW	S21	20 kW
060	60,000 BTU/h	260	260,000 BTU/h	S10	10 kW	S22	20 kW
070	70,000 BTU/h	350	350,000 BTU/h	S15	15 kW	S25	25 kW
080	80,000 BTU/h	360	360,000 BTU/h	S16	15 kW	S30	30 kW
090	90,000 BTU/h	400	400,000 BTU/h	S18	18 kW	S31	30 kW
100	100,000 BTU/h	480	480,000 BTU/h	S20	20 kW	S45	45 kW
115	115,000 BTU/h					S46	45 kW
125	125,000 BTU/h	**A/C H/P Factory-Installed**				S60	60 kW
130	130,000 BTU/h	**Electric Heat**				S75	75kW
140	140,000 BTU/h	XXX	No Heat				
150	150,000 BTU/h	005	5kW	030	30 kW		
180	180,000 BTU/h	010	10 kW	045	45 kW		
210	210,000 BTU/h	015	15 kW	060	60 kW		
225	225,000 BTU/h	020	20 kW	075	75kW		

See product specifications for heat size(s) available for each capacity.

Refrigeration Systems
A Single stage cooling modes
C Two stage cooling modes
F Two stage cooling modes with Hot Gas Reheat and Low-ambient control
G Single stage cooling mode with Low-ambient controller
H Two stage cooling mode with Low-ambient controller

Heat Exchanger
X No options
A Standard Aluminized Exchanger
S Stainless Steel Exchanger
U Ultra Low NoX

Controls
A Electromechanical controls
C DDC w/ BACnet™ interface

Sensors
D R32 Sensor
E RA Smoke Detector
F SA Smoke Detector
G RA & SA Smoke Detector

Coils, Hail guard
X No Options
C Hail Guard

Economizer
X No Options
A Ultra Low-Leak Downflow Economizer w/ Enthalpy Sensor
C Ultra Low-Leak Internal Horizontal Economizer w/ Enthalpy Sensor
E Ultra Low-Leak Downflow Economizer for DDC controls w/ Enthalpy Sensor
F Ultra Low-Leak Horizontal Economizer for DDC controls w/ Enthalpy Sensor
G Ultra Low-Leak Downflow Economizer w/ Dry Bulb Sensor
J Ultra Low-Leak Internal Horizontal Economizer w/ Dry Bulb Sensor
L Ultra Low-Leak Downflow Economizer for DDC controls w/ Dry Bulb Sensor
M Ultra Low-Leak Horizontal Economizer for DDC controls w/ Dry Bulb Sensor

Electrical
X No Options
A Non-Fused Disconnect
B Phase Monitor
C Thru-the-base connections
E Non-Fused Disconnect and Phase Monitor
F Non-Fused Disconnect and Thru-the-base connectons
H Phase Monitor and Thru-the-base connections
L Non-Fused Disconnect, Thru-the-base connectons and Phase Monitor

Service Options
X No Options
A Powered convenience outlet
B Non-powered convenience outlet
C Hinge Panels
D Hinged Panels and Powered convenience outlet
E Hinged Panels and non-powered convenience outlet

IAQ
X No Options

ERW, PE Connection
X No Options
B Single-point power connection for Power Exhaust

X No Options

G / E Stocking Models

Daikin 7.5-12.5 Ton Belt-Drive	
Model Number	**Code String**
DHC0903D000001S	DHC0903DXXXCXADXXXXXXXAA
DHC0904D000001S	DHC0904DXXXCXADXXXXXXXAA
DHC0907D000001S	DHC0907DXXXCXADXXXXXXXAA
DHC1023D000001S	DHC1023DXXXCXADXXXXXXXAA
DHC1024D000001S	DHC1024DXXXCXADXXXXXXXAA
DHC1027D000001S	DHC1027DXXXCXADXXXXXXXAA
DHC1203D000001S	DHC1203DXXXCXADXXXXXXXAA
DHC1204D000001S	DHC1204DXXXCXADXXXXXXXAA
DHC1207D000001S	DHC1207DXXXCXADXXXXXXXAA
DHC1503D000001S	DHC1503DXXXCXADXXXXXXXAA
DHC1504D000001S	DHC1504DXXXCXADXXXXXXXAA
DHC1507D000001S	DHC1507DXXXCXADXXXXXXXAA
DHC1503W000001F	DHC1503WXXXCXADXXXXXXXAA
DHC1504W000001F	DHC1504WXXXCXADXXXXXXXAA
DHC1507W000001F	DHC1507WXXXCXADXXXXXXXAA

Daikin Packaged Rooftop Units (RTUs) are built to perform, with features and options that help provide low installation and operation costs, superior indoor air quality, efficient operation, and longevity.

Installation

Daikin Packaged units are designed with fast and easy installation in mind and are ideal for both new construction and retrofit projects. Our packaged rooftop units are built to be a direct replacement for most rooftop units on the field without the need of a curb adapter, to be able to replace the unit in a shorter time and at a lower cost (compared to the previous design).

Cabinet Construction

Daikin packaged rooftop units are made with high quality galvanized steel with a powder-paint finish to provide higher corrosion resistance.

- Easy accessibility using our tool-less filter access
- The interior surface in the indoor air section is fully insulated to prevent sweating and thermal losses, using our foil face fiberglass insulation which also omits exposed filter fibers into the airstream.
- 1" Raised flanged edges around the supply and return offer easy installation for the duct connections.

- The full perimeter base rail is built using heavy gauge galvanized steel for a stronger structural installation. The base rails are a minimum of 3½" tall and include holes to allow for overhead rigging and lifting with forklifts.
- Electrical lines and gas lines can be brought through the base of the unit or through the horizontal knockout for easy installation and accessibility on the field.

Compressor

High performance, low noise scroll compressors to match the required total load.

- Resiliently factory-mounted on rubber grommets for vibration isolation
- Refrigeration circuit includes both low- and high-pressure transducer, high pressure safety switch and temperature sensors for the suction and discharge lines.
- Unit is factory charged with environmentally friendly low GWP R-32 refrigerant.
- Compressor location outside the condenser section to avoid air bypass.
- Internal overload protection included with compressor.
- Dual single-stage scroll compressor for partial load applications.

Supply Fan

The direct-drive with airfoil single width, single inlet (SWSI) Class II construction supply fan with aluminum fan +blades provides efficient and quiet operation at wide ranging static pressure and air flow requirements.

- Fan wheel is continuously welded to the hub plate and end rim for long lasting reliable operation.
- Direct-drive ECM motor removes the need for belts, sheaves, or bearings and its permanently lubricated motors provides low maintenance cost.
- Each fan assembly is dynamically trim balanced at the factory before shipment for quick start-up and efficient operation.
- Electromechanical integrated controls modulate the supply fan motor
- Motor with thermal overload is provided for motor long lasting operation.

Coils

All units use large face area outdoor coils. These coils are constructed with seamless copper tubes, mechanically bonded into aluminum plate-type fins with full drawn collars to completely cover the tubes for high operating efficiencies.

The indoor coil section is installed in a draw through configuration to provide better dehumidification.

» Coils are factory pressure tested to ensure pressure and leak integrity.

» Copper tube / aluminum fin coils on condenser and evaporator

» 5mm Smart Coil Technology on all condenser coils for improved performance and reduced refrigerant load.

Controls and Wiring

Packaged rooftop units come equipped with a well-organized, large, easy to use, weatherproof internal control box with easy access, for a better user experience.

» Units are factory-wired with labeled color-coded wires and complete 24-volt Electromechanical controls package.

» Terminal blocks are provided as standard for easy installation and field power wiring.

» The Daikin iLINQ Controller is a factory-installed solution to provide intelligent control for Daikin Light Commercial rooftop units* (RTUs). iLINQ provides physical inputs and outputs to control and monitor the RTU and features a graphic web interface for remote access (via a computer or tablet). Equipped with built-in BACnet™ IP and MS/TP interface or it can be used with an optional LonWorks® card that is available to integrate the Daikin RTU with building automation systems (BMS).

Filtration

Unit provides a draw-through filter section as standard for better air quality and long lasting component maintenance.

» Filters installed on the units are standard off the shelf sizes for easy replacement.

» One size filter per unit for low maintenance cost and easy replacement.

» Tool-less filter access for easy and fast filter replacement and service.

Heating Section

Wide ranging of electric heat selections effectively handle most comfort heating demand from morning warm-up control to full heat.

Electric Heat

ETL approved electric heat is factory assembled, installed and tested.

» Heating control is fully integrated into the unit's control system for quick start-up and reliable control.

» Durable low watt density, nickel chromium elements provide longer life (compared to units without)..

» Fuses are provided in each branch circuit to a maximum of 48 Amps per NEC requirements.

» Single-point power connection reduces installation cost.

» For operational safeties electric heat includes automatic reset,and high temperature limit safety protection and an airflow safety switch to prevent electric heat operation in the event of no airflow.

Electrical

Units are completely wired and tested at the factory to provide faster commissioning and start-up.

» Wiring complies with NEC requirements and all applicable UL standards.

» For ease of use, wiring and electrical components are number coded and labeled according to the electrical diagram.

» A 115 V GFI convenience outlet requiring independent power supply for the receptacle is optional.

» An optional unit powered 20 amp 115 V convenience outlet, complete with factory mounted transformer, disconnect switch, and primary and secondary overload protection, eliminates the need to pull a separate 115 V power source.

» Supply air fan, compressor, and condenser fan motor branch circuits have individual short circuit protection. Unit includes knockouts in the bottom of the main control panels for field wiring entrance.

» A single-point power connection with power block is standard and a terminal board is provided for connecting low voltage control wiring.

» For better serviceability an optional non-fused disconnect switch can be installed inside the control panel and operated by an externally mounted handle to disconnect the electrical power at the unit.

Daikin Modulating Hot Gas Reheat Dehumidification

Using a space sensor in conjunction with the Daikin iLINQ Controller and Reheat Module, the unit can initiate a Dehumidification Mode as the space humidity rises above setpoint. In this mode, the modulating valve diverts a percentage of the hot gas to the reheat coil as required in order to maintain supply air temperature requirements while lowering the space relative humidity. The modulating valve system allows smooth transition into dehumidification and longer run time at a steady supply air temperature. The indoor fan will operate at high and low speed during dehumidification mode.

DAIKIN

Applications

Daikin Rooftop units are intended for comfort cooling applications in normal heating, ventilating, and air conditioning. Consult your local Daikin sales representative for applications involving operations at high ambient temperatures, high altitudes, non-cataloged voltages, or for job-specific unit selections that fall outside of the range of the catalog tables.

For proper operation, units should be rigged in accordance with instructions stated on the installation manual. Fire dampers, if required, must be installed in the ductwork according to local and/or state codes. No space is allowed for these dampers in the unit.

Follow factory check, test and start procedures explicitly to achieve satisfactory start-up and operation.

Most rooftop applications take advantage of the significant energy savings provided with economizer operation. When an economizer system is used, mechanical refrigeration is typically not required below an ambient temperature of 50°F.

Serviceability

Daikin packaged rooftop units are built with serviceability in mind, designed to make future maintenance and service on the unit easy and accessible.

- Our packaged rooftop units offer a slide out blower to facilitate the access and removal of the fan.
- Filter panels on the small chassis line offer tool-less access for easy maintenance.
- Independent compressor outside of the air bypass to eliminate component blockage and provide easy access.
- Labeled field connections, color coded and continuously marked wire to identify point-to-point component connections.
- All 7.5- 12.5 ton units are designed for convertible airflow orientation to serve downflow or horizontal applications. Every unit ships prepared to convert to horizontal orientation in the field if required.
- Condenser clean out from inside-out.
- Easy access to gas valves and control panel.

Model	DHC0903D000001S	DHC0904D000001S	DHC0907D000001S
COOLING CAPACITY			
Total, BTU/h	90,000	90,000	90,000
IEER / EER	17.5/12.5	17.5/12.5	17.5/12.5
AHRI Reference #	216436797	216436798	216436799
EVAPORATOR MOTOR COIL			
Motor Type	DIRECT DRIVE	DIRECT DRIVE	DIRECT DRIVE
External Static Pressure (ESP)	STANDARD	STANDARD	STANDARD
Wheel Dia. X Width	Ø15.12 X 12.62	Ø15.12 X 12.62	Ø15.12 X 12.62
Indoor Nominal CFM	3000	3000	3000
RPM	300-1600	300-1600	300-1600
Indoor Horsepower	1.7	1.7	1.7
Filter Size (in)	16X25X2 (4)	16X25X2 (4)	16X25X2 (4)
Drain Size (NPT)	¾	¾	¾
R-32 Refrigerant Charge (oz.)	122.4/115	122.4/115	122.4/115
Evaporator Coil Face Area (ft^2)	12.8	12.8	12.8
Rows Deep/ Fins per Inch	4/16	4/16	4/16
CONDENSER FAN/COIL			
Quantity of Condenser Fan Motors	2	2	2
RPM (High/Low stage)	1122	1050	1050
Outdoor Horsepower	1/3	1/3	1/3
Fan Diameter/ # Fan Blades	22/3	22/3	22/3
Face Area (ft^2)	35.3	35.3	35.3
Rows Deep / Fins per Inch	2/28±1	2/28±1	2/28±1
COMPRESSOR (ALL SINGLE-STAGE)			
Quantity / Type / Stages	2/SCROLL/1	2/SCROLL/1	2/SCROLL/1
Compressor RLA / LRA	12.2/120	5.8/55.1	5.8/41.0
ELECTRICAL DATA			
Voltage-Phase-Frequency	208/230-3-60	460-3-60	575-3-60
Indoor Blower FLA	5.8	4	2.9
Max External Static (In. W.C.)	0.8	0.8	0.8
Outdoor Fan FLA	2	0.85	0.67
Min. Circuit Ampacity[1]	37.2/37.2	18.7	17.2
Max. Overcurrent Protection (A)[2]	45/45	20	20
Power Supply Conduit Hole Dia. (in)	1.375	1.375	1.375
Low-VoltageConduit Hole Dia. (in)	0.875	0.875	0.875
OPERATING WEIGHT (LBS.)			
Operating Weight (lbs)	1155	1155	1155
SHIPPING WEIGHT (LBS.)			
Ship Weight (lbs)	1215	1215	1215

[1] Wire size should be determined in accordance with National Electrical Codes. Extensive wire runs will require larger wire sizes.
[2] May use fuses or HACR-type circuit breakers of the same size as noted.
Note: Always check the S&R plate for electrical data on the unit being installed.

Model	DHC1023D000001S	DHC1024D000001S	DHC1027D000001S
COOLING CAPACITY			
Total, BTU/h	102,000	102,000	102,000
IEER / EER	17.5/12.5	17.5/12.5	17.5/12.5
AHRI Reference #	216436800	216436801	216436802
EVAPORATOR MOTOR COIL			
Motor Type	DIRECT DRIVE	DIRECT DRIVE	DIRECT DRIVE
External Static Pressure (ESP)	STANDARD	STANDARD	STANDARD
Wheel Dia. X Width	Ø15.12 X 12.62	Ø15.12 X 12.62	Ø15.12 X 12.62
Indoor Nominal CFM	3025	3025	3025
RPM	300-1600	300-1600	300-1600
Indoor Horsepower	2.4	2.4	2.4
Filter Size (in)	20x25x2(2) 25x25x2(2)	20x25x2(2) 25x25x2(2)	20x25x2(2) 25x25x2(2)
Drain Size (NPT)	¾	¾	¾
R-32 Refrigerant Charge (oz.)	123/124	123/124	123/124
Evaporator Coil Face Area (ft^2)	16.6	16.6	16.6
Rows Deep/ Fins per Inch	4/16	4/16	4/16
CONDENSER FAN/COIL			
Quantity of Condenser Fan Motors	2	2	2
RPM (High/Low stage)	1122	1050	1050
Outdoor Horsepower	1/3	1/3	1/3
Fan Diameter/ # Fan Blades	22/3	22/3	22/3
Face Area (ft^2)	35.3	35.3	35.3
Rows Deep / Fins per Inch	2/28±1	2/28±1	2/28±1
COMPRESSOR (ALL SINGLE-STAGE)			
Quantity / Type / Stages	2/SCROLL/1	2/SCROLL/1	2/SCROLL/1
Compressor RLA / LRA	14.1/120.4	6.4/55.1	5.1/41.0
ELECTRICAL DATA			
Voltage-Phase-Frequency	208/230-3-60	460-3-60	575-3-60
Indoor Blower FLA	8	5.4	4
Max External Static (In. W.C.)	0.8	0.8	0.8
Outdoor Fan FLA	2	0.85	0.67
Min. Circuit Ampacity[1]	43.7/43.7	21.5	16.9
Max. Overcurrent Protection (A)[2]	50/50	25	20
Power Supply Conduit Hole Dia. (in)	1.375	1.375	1.375
Low-VoltageConduit Hole Dia. (in)	0.875	0.875	0.875
OPERATING WEIGHT (LBS.)			
Operating Weight (lbs)	1176	1176	1176
SHIPPING WEIGHT (LBS.)			
Ship Weight (lbs)	1234	1234	1234

[1] Wire size should be determined in accordance with National Electrical Codes. Extensive wire runs will require larger wire sizes.
[2] May use fuses or HACR-type circuit breakers of the same size as noted.
Note: Always check the S&R plate for electrical data on the unit being installed.

Model	DHC1203D000001S	DHC1204D000001S	DHC1207D000001S
COOLING CAPACITY			
Total, BTU/h	116,000	116,000	116,000
IEER / EER	17/12.5	17/12.5	17/12.5
AHRI Reference #	216436803	216436804	216436805
EVAPORATOR MOTOR COIL			
Motor Type	DIRECT DRIVE	DIRECT DRIVE	DIRECT DRIVE
External Static Pressure (ESP)	STANDARD	STANDARD	STANDARD
Wheel Dia. X Width	Ø15.12 X 15.00	Ø15.12 X 15.00	Ø15.12 X 15.00
Indoor Nominal CFM	3500	3500	3500
RPM	300-1600	300-1600	300-1600
Indoor Horsepower	2.4	2.4	2.4
Filter Size (in)	20x25x2(2) 25x25x2(2)	20x25x2(2) 25x25x2(2)	20x25x2(2) 25x25x2(2)
Drain Size (NPT)	¾	¾	¾
R-32 Refrigerant Charge (oz.)	142/146	142/146	142/146
Evaporator Coil Face Area (ft^2)	16.6	16.6	16.6
Rows Deep/ Fins per Inch	4/16	4/16	4/16
CONDENSER FAN/COIL			
Quantity of Condenser Fan Motors	2	2	2
RPM (High/Low stage)	1122	1050	1050
Outdoor Horsepower	1/3	1/3	1/3
Fan Diameter/ # Fan Blades	22/3	22/3	22/3
Face Area (ft^2)	39.6	39.6	39.6
Rows Deep / Fins per Inch	2/28±1	2/28±1	2/28±1
COMPRESSOR (ALL SINGLE-STAGE)			
Quantity / Type / Stages	2/SCROLL/1	2/SCROLL/1	2/SCROLL/1
Compressor RLA / LRA	15.4/156.4	7.7/69.0	6.4/47.8
ELECTRICAL DATA			
Voltage-Phase-Frequency	208/230-3-60	460-3-60	575-3-60
Indoor Blower FLA	8	5.4	4
Max External Static (In. W.C.)	0.8	0.8	0.8
Outdoor Fan FLA	2	0.85	0.67
Min. Circuit Ampacity[1]	46.6/46.6	24.4	19.7
Max. Overcurrent Protection (A)[2]	60/60	30	25
Power Supply Conduit Hole Dia. (in)	1.375	1.375	1.375
Low-VoltageConduit Hole Dia. (in)	0.875	0.875	0.875
OPERATING WEIGHT (LBS.)			
Operating Weight (lbs)	1195	1195	1195
SHIPPING WEIGHT (LBS.)			
Ship Weight (lbs)	1252	1252	1252

[1] Wire size should be determined in accordance with National Electrical Codes. Extensive wire runs will require larger wire sizes.
[2] May use fuses or HACR-type circuit breakers of the same size as noted.
Note: Always check the S&R plate for electrical data on the unit being installed.

Model	DHC1503D000001S	DHC1504D000001S	DHC1507D000001S	DHC1503W000001F	DHC1504W000001F	DHC1507W000001F
COOLING CAPACITY						
Total, BTU/h	138,000	138,000	138,000	138,000	138,000	138,000
IEER / EER	16/12	16/12	16/12	16/12	16/12	16/12
AHRI Reference #	216436806	216436807	216436808	216436806	216436807	216436808
EVAPORATOR MOTOR COIL						
Motor Type	DIRECT DRIVE	DIRECT DRIVE	DIRECT DRIVE	DIRECT DRIVE	DIRECT DRIVE	DIRECT DRIVE
External Static Pressure (ESP)	STANDARD	STANDARD	STANDARD	HIGH	HIGH	HIGH
Wheel Dia. X Width	Ø15.12 X 15.00	Ø15.12 X 15.00	Ø15.12 X 15.00	Ø15.12 X 15.00	Ø15.12 X 15.00	Ø15.12 X 15.00
Indoor Nominal CFM	3800	3800	3800	3800	3800	3800
RPM	300-1600	300-1600	300-1600	300-1600	300-1600	300-1600
Indoor Horsepower	3.5	3.5	3.5	5.0	5.0	5.0
Filter Size (in)	25x25x2(4)	25x25x2(4)	25x25x2(4)	25x25x2(4)	25x25x2(4)	25x25x2(4)
Drain Size (NPT)	¾	¾	¾	¾	¾	¾
R-32 Refrigerant Charge (oz.)	148/147	148/147	148/147	148/147	148/147	148/147
Evaporator Coil Face Area (ft^2)	19.1	19.1	19.1	19.1	19.1	19.1
Rows Deep/ Fins per Inch	4/16	4/16	4/16	4/16	4/16	4/16
CONDENSER FAN/COIL						
Quantity of Condenser Fan Motors	2	2	2	2	2	2
RPM (High/Low stage)	1150	1150	1150	1150	1150	1150
Outdoor Horsepower	1/3	1/3	1/3	1/3	1/3	1/3
Fan Diameter/ # Fan Blades	22/3	22/3	22/3	22/3	22/3	22/3
Face Area (ft^2)	43.8	43.8	43.8	43.8	43.8	43.8
Rows Deep / Fins per Inch	2/28±1	2/28±1	2/28±1	2/28±1	2/28±1	2/28±1
COMPRESSOR (ALL SINGLE-STAGE)						
Quantity / Type / Stages	2/SCROLL/1	2/SCROLL/1	2/SCROLL/1	2/SCROLL/1	2/SCROLL/1	2/SCROLL/1
Compressor RLA / LRA	19.2/156.5	9/74.8	7.1/53.9	19.2/156.5	9/74.8	7.1/53.9
ELECTRICAL DATA						
Voltage-Phase-Frequency	208/230-3-60	460-3-60	575-3-60	208/230-3-60	460-3-60	575-3-60
Indoor Blower FLA	10.9	7.2	5	14.5	10.6	7.2
Max External Static (In. W.C.)	0.8	0.8	0.8	0.8	0.8	0.8
Outdoor Fan FLA	3.5	2	1.54	3.5	2	1.54
Min. Circuit Ampacity[1]	61.1/61.1	30.6	23.9	64.7/64.7	34.0	26.1
Max. Overcurrent Protection (A)[2]	80/80	35	30	80/80	40	30
Power Supply Conduit Hole Dia. (in)	1.375	1.375	1.375	1.375	1.375	1.375
Low-VoltageConduit Hole Dia. (in)	0.875	0.875	0.875	0.875	0.875	0.875
OPERATING WEIGHT (LBS.)						
Operating Weight (lbs)	1218	1218	1218	1218	1218	1218
SHIPPING WEIGHT (LBS.)						
Ship Weight (lbs)	1277	1277	1277	1277	1277	1277

[1] Wire size should be determined in accordance with National Electrical Codes. Extensive wire runs will require larger wire sizes.
[2] May use fuses or HACR-type circuit breakers of the same size as noted.
Note: Always check the S&R plate for electrical data on the unit being installed.

Coil Dimensions

		Indoor			Outdoor		
Model	Tons	Fin height in.	Fin length in.	Area (Ft^2)	Fin height in.	Fin length in.	Area (Ft^2)
DHC	7.5	34.6	53.1	12.8	47.9	53.1	35.3
	8.5	45.0	53.1	16.6	47.9	53.1	35.3
	10	45.0	53.1	16.6	47.9	59.6	39.6
	12.5	52.0	53.1	19.1	52.9	59.6	43.8

AHRI Ratings

MODEL	CAPACITY	EER	IEER
DHC090	90,000	12.5	17.5
DHC102	102,000	12.5	17.5
DHC120	116,000	12.5	17
DHC150	138,000	12	16

Sound Data

Model	Outdoor sound (dB) at 60 Hz								
	A-Weighted	63	125	250	500	1000	2000	4000	8000
090	81.3	-	67.7	69.8	74.3	76.1	74.7	68.4	60.0
102	81.2	-	70.3	70.6	75.1	76.4	74.4	69.1	60.1
120	81.3	-	68.2	71.6	73.7	76.0	75.8	70.5	60.7
150	85.0	-	75.8	76.4	78.5	78.2	77.7	74.7	70.4

db - decibel

Notes:

[1] Outdoor sound data is measured in accordance with AHRI standard 230.

[2] Measurements are expressed in terms of sound power. Do not compare these values to sound pressure values because sound pressure depends on specific environment factors which normally do not match individual applications. Sound power values are independent of the environment and therefore more accurate.

[3] A-weighted sound ratings filter out high and very low frequencies, to better approximate the response of "average" human ear. A-weighted measurements for Daikin units are taken in accordance with AHRI standard 230.

Model Size	DIM "A"
DHC090	$54^{3}/_{5}$
DHC0102	$54^{3}/_{5}$
DHC0120	$54^{3}/_{5}$
DHC0150	$54^{4}/_{5}$

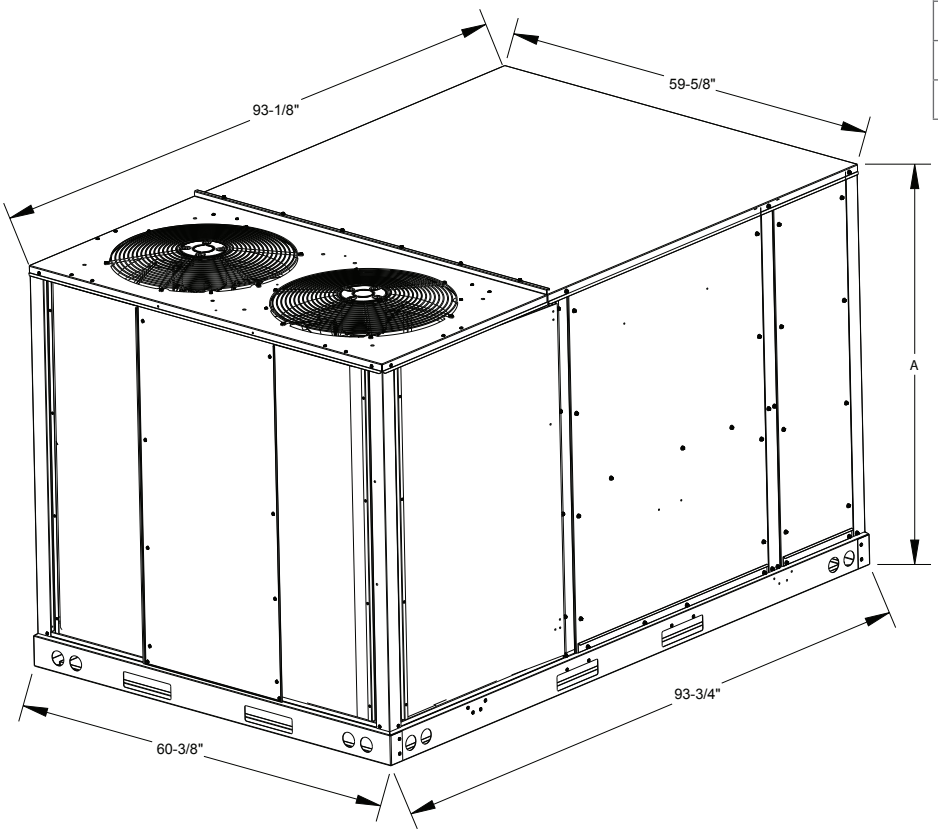

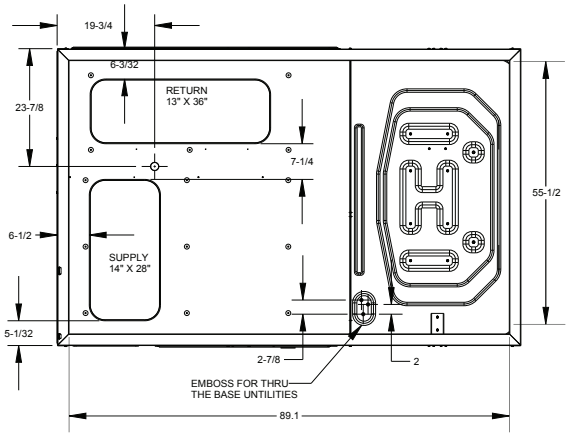

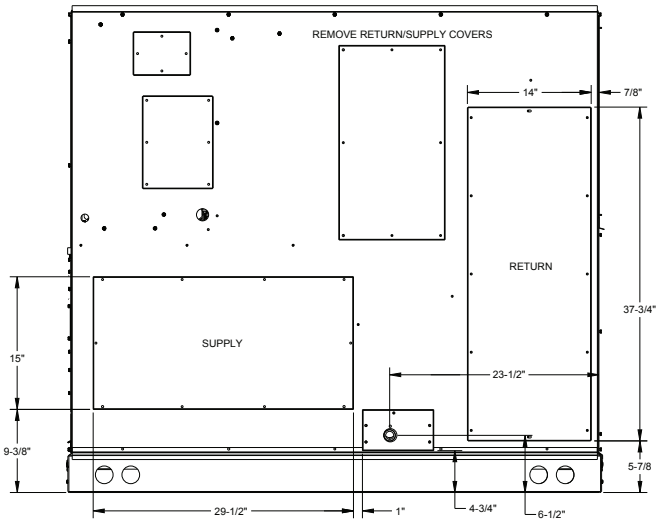

			Outdoor Ambient Temperature																							
			65				75				85				95				105				115			
			Entering Indoor Wet Bulb Temperature																							
IDB	Airflow	ID WB	59	63	67	71	59	63	67	71	59	63	67	71	59	63	67	71	59	63	67	71	59	63	67	71
70	2625	MBh	91.1	92.4	95.1	-	90.3	91.6	94.3	-	87.9	89.2	91.9	-	83.8	85.1	87.8	-	78.7	80.0	82.8	-	74.1	75.4	78.2	-
		S/T	0.63	0.56	0.44	-	0.63	0.56	0.44	-	0.66	0.59	0.46	-	0.68	0.61	0.47	-	0.71	0.64	0.50	-	0.80	0.72	0.57	-
		ΔT	19.75	17.92	14.51	-	19.70	17.87	14.46	-	19.95	18.13	14.72	-	19.68	17.85	14.44	-	19.43	17.61	14.20	-	20.58	18.75	15.34	-
		kW	5.29	5.29	5.28	-	5.88	5.87	5.86	-	6.53	6.53	6.52	-	7.24	7.23	7.22	-	8.03	8.02	8.01	-	8.96	8.95	8.94	-
		Amps	20.02	20.00	19.95	-	22.70	22.68	22.63	-	25.69	25.67	25.63	-	28.93	28.91	28.86	-	32.55	32.53	32.48	-	36.79	36.77	36.73	-
		Hi PR	248	249	251	-	287	288	290	-	328	329	331	-	372	373	375	-	419	420	422	-	470	471	473	-
		Lo PR	128	130	133	-	136	138	141	-	143	144	148	-	149	148	154	-	154	156	158	-	161	163	166	-
	3000	MBh	92.3	93.6	96.3	-	91.5	92.8	95.5	-	89.1	90.4	93.1	-	85.0	86.3	89.0	-	79.9	81.2	84.0	-	75.4	76.6	79.4	-
		S/T	0.67	0.59	0.46	-	0.67	0.60	0.46	-	0.70	0.62	0.48	-	0.72	0.64	0.49	-	0.76	0.67	0.51	-	0.85	0.76	0.59	-
		ΔT	18.64	16.82	13.41	-	18.59	16.77	13.36	-	18.85	17.02	13.61	-	18.57	16.75	13.34	-	18.33	16.50	13.09	-	19.47	17.65	14.24	-
		kW	5.32	5.32	5.31	-	5.91	5.90	5.89	-	6.56	6.56	6.55	-	7.27	7.26	7.25	-	8.06	8.05	8.04	-	8.99	8.98	8.97	-
		Amps	20.16	20.14	20.09	-	22.84	22.82	22.77	-	25.83	25.81	25.76	-	29.07	29.05	29.00	-	32.69	32.67	32.62	-	36.93	36.91	36.86	-
		Hi PR	250	251	253	-	289	290	292	-	330	331	333	-	374	375	377	-	422	423	424	-	472	473	475	-
		Lo PR	130	132	135	-	138	140	143	-	145	146	150	-	151	151	155	-	156	158	161	-	163	165	168	-
	3375	MBh	93.7	95.0	97.8	-	92.9	94.2	96.9	-	90.5	91.8	94.6	-	86.4	87.7	90.4	-	81.4	82.7	85.4	-	76.8	78.1	80.8	-
		S/T	0.70	0.62	0.47	-	0.71	0.62	0.48	-	0.73	0.65	0.50	-	0.76	0.67	0.51	-	0.79	0.70	0.53	-	0.90	0.79	0.61	-
		ΔT	17.71	15.89	12.48	-	17.66	15.84	12.43	-	17.92	16.09	12.68	-	17.65	15.82	12.41	-	17.40	15.58	12.17	-	18.54	16.72	13.31	-
		kW	5.35	5.34	5.33	-	5.93	5.93	5.92	-	6.59	6.58	6.57	-	7.29	7.29	7.28	-	8.08	8.08	8.07	-	9.01	9.01	9.00	-
		Amps	20.28	20.25	20.21	-	22.96	22.93	22.89	-	25.95	25.93	25.88	-	29.19	29.17	29.12	-	32.80	32.78	32.74	-	37.05	37.03	36.98	-
		Hi PR	252	253	255	-	291	292	294	-	332	333	335	-	376	377	379	-	424	425	426	-	474	475	477	-
		Lo PR	132	134	137	-	140	142	145	-	147	148	152	-	149	154	158	-	158	160	163	-	165	167	170	-
75	2625	MBh	91.6	92.9	95.6	99.8	90.8	92.1	94.8	99.0	88.4	89.7	92.4	96.6	84.3	85.6	88.3	92.5	79.3	80.6	83.3	87.5	74.7	76.0	78.7	82.9
		S/T	0.75	0.68	0.56	0.4	0.75	0.69	0.56	0.4	0.78	0.71	0.59	0.5	0.81	0.74	0.60	0.5	0.85	0.78	0.63	0.5	0.95	0.87	0.71	0.6
		ΔT	23.76	21.93	18.53	15.0	23.71	21.88	18.48	14.9	23.97	22.14	18.73	15.2	23.69	21.87	18.46	14.9	23.45	21.62	18.21	14.7	24.59	22.77	19.36	15.8
		kW	5.29	5.28	5.27	5.3	5.87	5.87	5.86	5.9	6.53	6.52	6.51	6.6	7.23	7.23	7.22	7.3	8.02	8.02	8.01	8.1	8.95	8.95	8.94	9.0
		Amps	20.00	19.98	19.94	20.1	22.68	22.66	22.62	22.8	25.68	25.65	25.61	25.8	28.91	28.89	28.85	29.1	32.53	32.51	32.46	32.7	36.78	36.75	36.71	36.9
		Hi PR	248	249	251	255.1	287	288	290	294.2	328	329	331	335.1	372	373	375	379.2	420	421	422	426.8	470	471	473	477.5
		Lo PR	128	130	133	138.6	136	138	141	146.4	139	145	148	153.2	140	150	154	159.0	154	156	159	164.7	161	163	166	167.9
	3000	MBh	92.8	94.1	96.8	101.0	92.0	93.3	96.0	100.2	89.6	90.9	93.6	97.8	85.5	86.8	89.5	93.7	80.5	81.8	84.5	88.7	75.9	77.2	79.9	84.1
		S/T	0.81	0.73	0.59	0.5	0.81	0.74	0.60	0.5	0.84	0.76	0.62	0.5	0.87	0.79	0.64	0.5	0.92	0.83	0.67	0.5	1.00	0.93	0.75	0.6
		ΔT	22.66	20.83	17.42	13.9	22.61	20.78	17.37	13.8	22.86	21.04	17.63	14.1	22.59	20.76	17.35	13.8	22.35	20.52	17.11	13.6	22.99	21.66	18.25	14.7
		kW	5.32	5.31	5.30	5.3	5.90	5.90	5.89	5.9	6.56	6.55	6.54	6.6	7.26	7.26	7.25	7.3	8.05	8.05	8.04	8.1	8.98	8.98	8.97	9.0
		Amps	20.14	20.12	20.07	20.3	22.82	22.80	22.76	23.0	25.81	25.79	25.75	26.0	29.05	29.03	28.99	29.2	32.67	32.65	32.60	32.8	36.91	36.89	36.85	37.1
		Hi PR	250	251	253	257.2	289	290	292	296.3	330	331	333	337.2	374	375	377	381.3	422	423	425	428.9	472	474	475	479.6
		Lo PR	130	132	135	140.5	138	140	143	148.3	140	146	150	155.1	139	152	155	160.9	156	155	161	166.6	148	165	168	171.1
	3375	MBh	94.3	95.6	98.3	102.5	93.4	94.7	97.5	101.7	91.1	92.3	95.1	99.3	86.9	88.2	91.0	95.1	81.9	83.2	85.9	90.1	77.3	78.6	81.4	85.5
		S/T	0.86	0.77	0.62	0.5	0.86	0.78	0.63	0.5	0.89	0.81	0.65	0.5	0.92	0.83	0.67	0.5	0.97	0.87	0.70	0.5	1.00	0.98	0.79	0.6
		ΔT	21.73	19.90	16.49	13.0	21.68	19.85	16.44	12.9	21.94	20.11	16.70	13.2	21.66	19.83	16.42	12.9	21.42	19.59	16.18	12.6	20.83	20.73	17.32	13.8
		kW	5.34	5.34	5.33	5.4	5.93	5.92	5.91	6.0	6.58	6.58	6.57	6.6	7.29	7.29	7.28	7.3	8.08	8.08	8.07	8.1	9.01	9.00	8.99	9.0
		Amps	20.26	20.24	20.19	20.4	22.94	22.92	22.87	23.1	25.93	25.91	25.86	26.1	29.17	29.15	29.10	29.3	32.79	32.77	32.72	32.9	37.03	37.01	36.96	37.2
		Hi PR	252	253	255	259.2	291	292	294	298.3	332	333	335	339.3	376	377	379	383.4	424	425	427	430.9	475	476	477	481.6
		Lo PR	132	134	137	142.6	139	142	145	150.4	139	148	152	157.2	140	154	158	163.0	158	157	163	168.7	165	167	170	174.5

IDB: Entering Indoor Dry Bulb Temperature

Shaded area reflects ACCA (TVA) conditions

kW = Total system power

High and low pressures are measured at the liquid and suction access fittings.

Amps: Unit amps (comp.+ evaporator + condenser fan motors)

Design Subcooling, 16 - 19 °F @ the liquid access fitting connection ARI 95 test conditions. Design Superheat 8 - 12°F @ the compressor suction access fitting connection.

			Outdoor Ambient Temperature																							
			65				75				85				95				105				115			
			Entering Indoor Wet Bulb Temperature																							
IDB	Airflow	ID WB	59	63	67	71	59	63	67	71	59	63	67	71	59	63	67	71	59	63	67	71	59	63	67	71
80	2625	MBh	92.1	93.4	96.1	100.3	91.3	92.6	95.3	99.5	88.9	90.2	92.9	97.1	84.8	86.1	88.8	93.0	79.7	81.0	83.8	87.9	75.2	76.4	79.2	83.4
		S/T	0.87	0.80	0.68	0.5	0.88	0.81	0.68	0.6	0.91	0.84	0.71	0.6	0.94	0.87	0.73	0.6	1.00	0.91	0.77	0.6	1.00	1.00	0.85	0.7
		ΔT	27.80	25.98	22.57	19.0	27.75	25.93	22.52	19.0	28.01	26.18	22.77	19.2	27.73	25.91	22.50	19.0	27.49	25.66	22.25	18.7	26.03	26.47	23.40	19.9
		kW	5.29	5.29	5.28	5.3	5.88	5.87	5.86	5.9	6.53	6.52	6.51	6.6	7.24	7.23	7.22	7.3	8.03	8.02	8.01	8.1	8.95	8.95	8.94	9.0
		Amps	20.02	20.00	19.95	20.2	22.70	22.68	22.63	22.8	25.69	25.67	25.62	25.8	28.93	28.91	28.86	29.1	32.54	32.52	32.48	32.7	36.79	36.77	36.72	36.9
		Hi PR	248	249	251	255.5	287	289	290	294.6	328	330	331	335.6	373	374	375	379.7	420	421	423	427.2	471	472	474	477.9
		Lo PR	128	130	134	139.2	128	138	142	147.0	128	145	148	153.8	149	151	154	159.6	155	153	160	165.3	162	153	167	171.1
	3000	MBh	93.3	94.6	97.3	101.5	92.5	93.8	96.5	100.7	90.1	91.4	94.1	98.3	86.0	87.3	90.0	94.2	80.9	82.2	85.0	89.2	76.4	77.6	80.4	84.6
		S/T	0.94	0.87	0.73	0.6	0.95	0.87	0.73	0.6	0.99	0.91	0.76	0.6	1.00	0.94	0.78	0.6	1.00	0.99	0.82	0.7	1.00	1.00	0.92	0.7
		ΔT	26.70	24.87	21.46	17.9	26.65	24.82	21.41	17.9	26.91	25.08	21.67	18.1	26.05	24.81	21.40	17.9	24.53	24.56	21.15	17.6	23.14	23.53	22.30	18.8
		kW	5.32	5.32	5.31	5.4	5.91	5.90	5.89	5.9	6.56	6.56	6.55	6.6	7.27	7.26	7.25	7.3	8.06	8.05	8.04	8.1	8.99	8.98	8.97	9.0
		Amps	20.16	20.13	20.09	20.3	22.84	22.82	22.77	23.0	25.83	25.81	25.76	26.0	29.07	29.05	29.00	29.2	32.68	32.66	32.62	32.8	36.93	36.91	36.86	37.1
		Hi PR	250	252	253	257.6	290	291	292	296.7	331	332	333	337.7	375	376	377	381.8	422	423	425	429.3	473	474	476	480.1
		Lo PR	128	132	136	141.1	128	140	143	148.9	145	147	150	155.7	152	151	156	161.5	157	152	162	167.2	164	160	169	174.3
	3375	MBh	94.7	96.0	98.8	102.9	93.9	95.2	97.9	102.1	91.5	92.8	95.6	99.7	87.4	88.7	91.4	95.6	82.4	83.7	86.4	90.6	77.8	79.1	81.8	86.0
		S/T	1.00	0.93	0.77	0.6	1.00	0.93	0.78	0.6	1.00	0.97	0.81	0.6	1.00	1.00	0.83	0.7	1.00	1.00	0.87	0.7	1.00	1.00	0.97	0.8
		ΔT	25.52	23.95	20.54	17.0	25.30	23.90	20.49	17.0	24.65	24.15	20.74	17.2	23.55	23.88	20.47	16.9	22.19	22.54	20.22	16.7	20.96	21.30	21.37	17.8
		kW	5.35	5.34	5.33	5.4	5.93	5.93	5.92	6.0	6.59	6.58	6.57	6.6	7.29	7.29	7.28	7.3	8.08	8.08	8.07	8.1	9.01	9.01	9.00	9.0
		Amps	20.27	20.25	20.21	20.4	22.95	22.93	22.89	23.1	25.94	25.92	25.88	26.1	29.18	29.16	29.12	29.3	32.80	32.78	32.73	32.9	37.04	37.02	36.98	37.2
		Hi PR	253	254	255	259.7	292	293	294	298.8	333	334	335	339.7	377	378	379	383.8	424	425	427	431.4	475	476	478	482.1
		Lo PR	133	134	138	143.2	141	142	145	151.0	147	149	152	157.8	153	152	158	163.6	159	161	164	169.2	166	167	167	176.3
85	2625	MBh	93.6	94.9	97.7	101.8	92.8	94.1	96.8	101.0	90.4	91.7	94.5	98.6	86.3	87.6	90.3	94.5	81.3	82.6	85.3	89.5	76.7	78.0	80.7	84.9
		S/T	0.97	0.90	0.77	0.6	0.97	0.91	0.78	0.6	1.00	0.94	0.81	0.7	1.00	0.97	0.83	0.7	1.00	1.00	0.87	0.7	1.00	1.00	0.97	0.8
		ΔT	31.39	29.56	26.15	22.6	31.34	29.51	26.10	22.6	31.32	29.77	26.36	22.8	29.89	29.49	26.08	22.6	28.15	28.60	25.84	22.3	26.56	27.01	26.98	23.5
		kW	5.30	5.30	5.29	5.3	5.89	5.88	5.87	5.9	6.54	6.54	6.53	6.6	7.25	7.24	7.23	7.3	8.04	8.03	8.02	8.1	8.97	8.96	8.95	9.0
		Amps	20.07	20.05	20.00	20.2	22.75	22.73	22.68	22.9	25.74	25.72	25.67	25.9	28.98	28.96	28.91	29.1	32.60	32.58	32.53	32.7	36.84	36.82	36.77	37.0
		Hi PR	250	251	252	256.7	289	290	291	295.8	330	331	332	336.7	374	375	377	380.8	421	422	424	428.4	472	473	475	479.1
		Lo PR	131	132	136	141.1	139	140	143	148.9	147	142	150	155.7	151	141	156	161.5	157	158	162	167.2	164	166	169	174.3
	3000	MBh	94.8	96.1	98.9	103.0	94.0	95.3	98.0	102.2	91.6	92.9	95.7	99.8	87.5	88.8	91.5	95.7	82.5	83.8	86.5	90.7	77.9	79.2	81.9	86.1
		S/T	1.00	0.98	0.84	0.7	1.00	0.98	0.84	0.7	1.00	1.00	0.87	0.7	1.00	1.00	0.90	0.7	1.00	1.00	0.94	0.8	1.00	1.00	1.00	0.9
		ΔT	28.74	28.46	25.05	21.5	28.49	28.41	25.00	21.5	27.77	28.16	25.26	21.7	26.52	26.91	24.98	21.4	25.00	25.39	24.74	21.2	23.61	24.00	24.83	22.3
		kW	5.33	5.33	5.32	5.4	5.92	5.91	5.90	5.9	6.57	6.57	6.56	6.6	7.28	7.27	7.26	7.3	8.07	8.06	8.05	8.1	9.00	8.99	8.98	9.0
		Amps	20.21	20.19	20.14	20.3	22.89	22.87	22.82	23.0	25.88	25.86	25.81	26.0	29.12	29.10	29.05	29.3	32.74	32.71	32.67	32.9	36.98	36.96	36.91	37.1
		Hi PR	252	253	254	258.8	291	292	294	297.9	332	333	335	338.8	376	377	379	382.9	423	424	426	430.5	474	475	477	481.2
		Lo PR	134	134	138	143.0	140	142	145	150.8	147	149	152	157.6	153	155	158	163.4	159	160	164	169.1	166	167	171	176.2
	3375	MBh	96.3	97.6	100.3	104.5	95.5	96.8	99.5	103.7	93.1	94.4	97.1	101.3	89.0	90.3	93.0	97.2	83.9	85.2	88.0	92.1	79.3	80.6	83.4	87.5
		S/T	1.00	1.00	0.89	0.7	1.00	1.00	0.90	0.7	1.00	1.00	0.93	0.8	1.00	1.00	0.96	0.8	1.00	1.00	1.00	0.8	1.00	1.00	1.00	0.9
		ΔT	25.93	26.28	24.12	20.6	25.71	26.06	24.07	20.5	25.07	25.42	24.33	20.8	23.96	24.31	24.05	20.5	22.61	22.96	23.69	20.3	21.37	21.72	22.46	21.4
		kW	5.36	5.35	5.34	5.4	5.94	5.94	5.93	6.0	6.60	6.59	6.58	6.6	7.30	7.30	7.29	7.3	8.09	8.09	8.08	8.1	9.02	9.02	9.01	9.1
		Amps	20.32	20.30	20.26	20.5	23.00	22.98	22.94	23.1	26.00	25.98	25.93	26.1	29.23	29.21	29.17	29.4	32.85	32.83	32.78	33.0	37.10	37.08	37.03	37.2
		Hi PR	254	255	257	260.8	293	294	296	299.9	334	335	337	340.9	378	379	381	385.0	425	426	428	432.5	476	477	479	483.3
		Lo PR	135	136	140	145.1	143	144	147	152.9	149	151	154	159.7	155	157	160	165.5	161	162	167	171.2	168	170	174	178.3

IDB: Entering Indoor Dry Bulb Temperature

Shaded area reflects ACCA (TVA) conditions

kW = Total system power

High and low pressures are measured at the liquid and suction access fittings.

Amps: Unit amps (comp.+ evaporator + condenser fan motors)

Design Subcooling, 16 - 19 °F @ the liquid access fitting connection ARI 95 test conditions. Design Superheat 8 - 12°F @ the compressor suction access fitting connection.

			Outdoor Ambient Temperature																							
			65				75				85				95				105				115			
			Entering Indoor Wet Bulb Temperature																							
IDB	Airflow	ID WB	59	63	67	71	59	63	67	71	59	63	67	71	59	63	67	71	59	63	67	71	59	63	67	71
70	2800	MBh	103.9	105.3	108.4	-	102.9	104.4	107.5	-	100.2	101.7	104.8	-	95.6	97.0	100.1	-	89.9	91.3	94.4	-	84.7	86.1	89.2	-
		S/T	0.58	0.52	0.40	-	0.58	0.52	0.41	-	0.61	0.54	0.42	-	0.63	0.56	0.44	-	0.66	0.59	0.45	-	0.74	0.66	0.52	-
		ΔT	19.55	17.70	14.24	-	19.50	17.65	14.19	-	19.76	17.91	14.45	-	19.48	17.63	14.17	-	19.23	17.38	13.92	-	20.39	18.54	15.08	-
		kW	5.91	5.91	5.89	-	6.61	6.60	6.59	-	7.38	7.38	7.36	-	8.22	8.21	8.20	-	9.16	9.15	9.14	-	10.26	10.25	10.24	-
		Amps	22.98	22.95	22.90	-	26.15	26.13	26.07	-	29.70	29.68	29.62	-	33.54	33.52	33.46	-	37.83	37.81	37.75	-	42.87	42.84	42.79	-
		Hi PR	254	255	256	-	293	295	296	-	335	336	338	-	380	381	383	-	429	430	432	-	480	482	483	-
		Lo PR	125	126	130	-	132	134	137	-	139	141	144	-	145	146	149	-	150	152	155	-	157	159	162	-
	3025	MBh	104.7	106.1	109.2	-	103.7	105.2	108.3	-	101.0	102.5	105.6	-	96.4	97.8	100.9	-	90.7	92.1	95.2	-	85.5	86.9	90.0	-
		S/T	0.60	0.53	0.41	-	0.60	0.54	0.42	-	0.63	0.56	0.44	-	0.65	0.58	0.45	-	0.68	0.60	0.46	-	0.77	0.69	0.53	-
		ΔT	18.91	17.06	13.60	-	18.86	17.01	13.55	-	19.12	17.27	13.81	-	18.84	16.99	13.53	-	18.59	16.74	13.28	-	19.75	17.90	14.44	-
		kW	5.93	5.93	5.91	-	6.63	6.62	6.61	-	7.40	7.40	7.38	-	8.24	8.24	8.22	-	9.18	9.17	9.16	-	10.28	10.27	10.26	-
		Amps	23.07	23.04	22.99	-	26.25	26.22	26.17	-	29.80	29.77	29.72	-	33.64	33.61	33.56	-	37.93	37.90	37.85	-	42.96	42.93	42.88	-
		Hi PR	255	256	258	-	295	296	298	-	336	338	339	-	381	383	384	-	430	431	433	-	482	483	485	-
		Lo PR	126	128	131	-	134	135	138	-	140	142	145	-	146	147	150	-	151	153	156	-	158	160	163	-
	3600	MBh	107.3	108.7	111.8	-	106.3	107.8	110.9	-	103.6	105.1	108.2	-	99.0	100.4	103.5	-	93.3	94.7	97.8	-	88.1	89.5	92.6	-
		S/T	0.65	0.57	0.43	-	0.65	0.57	0.43	-	0.68	0.60	0.45	-	0.70	0.62	0.46	-	0.73	0.64	0.48	-	0.83	0.73	0.56	-
		ΔT	17.52	15.67	12.21	-	17.47	15.62	12.16	-	17.73	15.88	12.42	-	17.45	15.60	12.14	-	17.21	15.35	11.90	-	18.37	16.51	13.06	-
		kW	5.98	5.97	5.96	-	6.67	6.67	6.65	-	7.45	7.44	7.43	-	8.29	8.28	8.27	-	9.22	9.22	9.21	-	10.32	10.32	10.31	-
		Amps	23.27	23.25	23.19	-	26.45	26.43	26.37	-	30.00	29.97	29.92	-	33.84	33.81	33.76	-	38.13	38.10	38.05	-	43.16	43.14	43.08	-
		Hi PR	258	259	261	-	298	299	301	-	340	341	343	-	385	386	388	-	433	434	436	-	485	486	488	-
		Lo PR	129	131	134	-	137	138	141	-	143	145	148	-	149	151	154	-	154	156	159	-	161	163	166	-
75	2800	MBh	104.4	105.8	108.9	113.7	103.4	104.9	108.0	112.7	100.7	102.2	105.3	110.0	96.1	97.5	100.6	105.4	90.4	91.8	94.9	99.7	85.2	86.6	89.7	94.5
		S/T	0.70	0.63	0.52	0.4	0.70	0.64	0.52	0.4	0.73	0.66	0.54	0.4	0.76	0.69	0.56	0.4	0.79	0.72	0.58	0.4	0.88	0.80	0.66	0.5
		ΔT	23.62	21.77	18.31	14.7	23.57	21.72	18.26	14.7	23.83	21.98	18.52	14.9	23.55	21.70	18.24	14.7	23.30	21.45	17.99	14.4	24.46	22.61	19.15	15.6
		kW	5.91	5.90	5.89	5.9	6.60	6.60	6.58	6.6	7.38	7.37	7.36	7.4	8.22	8.21	8.20	8.3	9.15	9.15	9.14	9.2	10.25	10.25	10.24	10.3
		Amps	22.95	22.93	22.88	23.1	26.13	26.11	26.05	26.3	29.68	29.66	29.60	29.8	33.52	33.50	33.44	33.7	37.81	37.79	37.73	38.0	42.84	42.82	42.77	43.0
		Hi PR	254	255	257	261.1	294	295	297	300.9	335	337	338	342.7	380	382	383	387.7	429	430	432	436.2	481	482	484	487.9
		Lo PR	125	126	130	134.9	133	134	137	142.5	139	141	144	149.1	140	146	149	154.7	150	152	155	160.2	157	159	162	167.1
	3025	MBh	105.2	106.7	109.8	114.5	104.3	105.7	108.8	113.6	101.6	103.0	106.1	110.9	96.9	98.4	101.5	106.2	91.2	92.7	95.8	100.5	86.0	87.5	90.6	95.3
		S/T	0.73	0.66	0.54	0.4	0.73	0.66	0.54	0.4	0.76	0.69	0.56	0.4	0.79	0.71	0.58	0.4	0.83	0.75	0.60	0.5	0.92	0.84	0.68	0.5
		ΔT	22.98	21.13	17.67	14.1	22.93	21.08	17.62	14.0	23.19	21.34	17.88	14.3	22.91	21.06	17.60	14.0	22.67	20.81	17.36	13.8	23.83	21.97	18.51	14.9
		kW	5.93	5.92	5.91	6.0	6.62	6.62	6.60	6.7	7.40	7.39	7.38	7.4	8.24	8.23	8.22	8.3	9.17	9.17	9.16	9.2	10.27	10.27	10.26	10.3
		Amps	23.05	23.02	22.97	23.2	26.23	26.20	26.15	26.4	29.78	29.75	29.70	29.9	33.62	33.59	33.54	33.8	37.91	37.88	37.83	38.1	42.94	42.91	42.86	43.1
		Hi PR	255	256	258	262.3	295	296	298	302.2	337	338	340	344.0	382	383	385	389.0	430	431	433	437.4	482	483	485	489.2
		Lo PR	126	128	131	136.0	134	135	138	143.6	139	142	145	150.2	139	147	151	155.8	151	153	156	161.3	158	160	163	168.2
	3600	MBh	107.8	109.3	112.4	117.1	106.9	108.4	111.5	116.2	104.2	105.6	108.7	113.5	99.5	101.0	104.1	108.8	93.8	95.3	98.4	103.1	88.6	90.1	93.2	97.9
		S/T	0.79	0.72	0.57	0.4	0.80	0.72	0.58	0.4	0.83	0.75	0.60	0.5	0.86	0.77	0.62	0.5	0.90	0.81	0.64	0.5	1.00	0.91	0.73	0.5
		ΔT	21.60	19.74	16.29	12.7	21.55	19.69	16.23	12.7	21.81	19.95	16.49	12.9	21.53	19.67	16.22	12.6	21.28	19.43	15.97	12.4	22.38	20.59	17.13	13.5
		kW	5.97	5.97	5.95	6.0	6.67	6.66	6.65	6.7	7.44	7.44	7.42	7.5	8.28	8.28	8.26	8.3	9.22	9.21	9.20	9.3	10.32	10.31	10.30	10.4
		Amps	23.25	23.23	23.17	23.4	26.43	26.41	26.35	26.6	29.98	29.95	29.90	30.1	33.82	33.79	33.74	34.0	38.11	38.08	38.03	38.3	43.14	43.12	43.06	43.3
		Hi PR	258	259	261	265.5	298	299	301	305.4	340	341	343	347.2	385	386	388	392.1	433	434	436	440.6	485	486	488	492.4
		Lo PR	129	131	134	139.2	137	138	141	146.8	140	145	148	153.4	139	151	154	159.0	155	156	159	164.5	161	163	166	171.4

IDB: Entering Indoor Dry Bulb Temperature

Shaded area reflects ACCA (TVA) conditions

kW = Total system power

High and low pressures are measured at the liquid and suction access fittings.

Amps: Unit amps (comp.+ evaporator + condenser fan motors)

Design Subcooling, 16 - 19 °F @ the liquid access fitting connection ARI 95 test conditions. Design Superheat 8 - 12°F @ the compressor suction access fitting connection.

			Outdoor Ambient Temperature																							
			65				75				85				95				105				115			
			Entering Indoor Wet Bulb Temperature																							
IDB	Airflow	ID WB	59	63	67	71	59	63	67	71	59	63	67	71	59	63	67	71	59	63	67	71	59	63	67	71
80	2800	MBh	104.9	106.4	109.5	114.2	104.0	105.4	108.5	113.3	101.3	102.7	105.8	110.6	96.6	98.1	101.2	105.9	90.9	92.4	95.5	100.2	85.7	87.2	90.3	95.0
		S/T	0.81	0.75	0.63	0.5	0.82	0.75	0.63	0.5	0.85	0.78	0.66	0.5	0.88	0.81	0.68	0.5	0.93	0.85	0.71	0.6	1.00	0.94	0.79	0.6
		ΔT	27.72	25.87	22.41	18.8	27.67	25.82	22.36	18.8	27.93	26.08	22.62	19.0	27.65	25.80	22.34	18.8	27.41	25.55	22.09	18.5	27.82	26.71	23.25	19.7
		kW	5.91	5.91	5.89	5.9	6.61	6.60	6.59	6.6	7.38	7.38	7.36	7.4	8.22	8.21	8.20	8.3	9.16	9.15	9.14	9.2	10.26	10.25	10.24	10.3
		Amps	22.97	22.95	22.89	23.1	26.15	26.13	26.07	26.3	29.70	29.67	29.62	29.9	33.54	33.51	33.46	33.7	37.83	37.80	37.75	38.0	42.86	42.84	42.78	43.0
		Hi PR	254	255	257	261.5	294	295	297	301.4	336	337	339	343.2	381	382	384	388.2	429	430	432	436.7	481	482	484	488.4
		Lo PR	126	127	130	135.5	128	135	138	143.0	128	141	144	149.7	145	147	150	155.3	151	152	155	160.7	158	159	162	167.6
	3025	MBh	105.7	107.2	110.3	115.0	104.8	106.3	109.4	114.1	102.1	103.6	106.7	111.4	97.4	98.9	102.0	106.7	91.7	93.2	96.3	101.0	86.5	88.0	91.1	95.8
		S/T	0.85	0.78	0.66	0.5	0.86	0.79	0.66	0.5	0.89	0.82	0.69	0.5	0.92	0.85	0.71	0.6	0.97	0.89	0.74	0.6	1.00	0.99	0.83	0.7
		ΔT	27.08	25.23	21.77	18.2	27.03	25.18	21.72	18.1	27.29	25.44	21.98	18.4	27.01	25.16	21.70	18.1	26.77	24.91	21.46	17.9	26.01	26.07	22.62	19.0
		kW	5.93	5.93	5.91	6.0	6.63	6.62	6.61	6.7	7.40	7.40	7.38	7.4	8.24	8.23	8.22	8.3	9.18	9.17	9.16	9.2	10.28	10.27	10.26	10.3
		Amps	23.07	23.04	22.99	23.2	26.24	26.22	26.16	26.4	29.79	29.77	29.71	30.0	33.63	33.61	33.55	33.8	37.92	37.90	37.84	38.1	42.96	42.93	42.88	43.1
		Hi PR	256	257	258	262.8	295	296	298	302.7	337	338	340	344.4	382	383	385	389.4	431	432	434	437.9	482	483	485	489.7
		Lo PR	127	128	131	136.6	128	136	139	144.1	141	142	145	150.8	146	148	151	156.4	127	152	157	161.9	159	160	163	168.7
	3600	MBh	108.4	109.8	112.9	117.7	107.4	108.9	112.0	116.7	104.7	106.2	109.3	114.0	100.1	101.5	104.6	109.4	94.4	95.8	98.9	103.7	89.2	90.6	93.7	98.5
		S/T	0.94	0.86	0.71	0.6	0.95	0.87	0.72	0.6	0.98	0.90	0.75	0.6	1.00	0.93	0.77	0.6	1.00	0.97	0.80	0.6	1.00	1.00	0.90	0.7
		ΔT	25.70	23.84	20.39	16.8	25.65	23.79	20.34	16.8	25.91	24.05	20.60	17.0	25.27	23.77	20.32	16.7	23.83	23.53	20.07	16.5	22.51	22.88	21.23	17.6
		kW	5.98	5.97	5.96	6.0	6.67	6.66	6.65	6.7	7.45	7.44	7.43	7.5	8.28	8.28	8.27	8.3	9.22	9.22	9.20	9.3	10.32	10.32	10.30	10.4
		Amps	23.27	23.24	23.19	23.4	26.45	26.42	26.37	26.6	30.00	29.97	29.92	30.2	33.84	33.81	33.76	34.0	38.13	38.10	38.05	38.3	43.16	43.13	43.08	43.3
		Hi PR	259	260	262	266.0	299	300	301	305.9	340	341	343	347.6	385	386	388	392.6	434	435	437	441.1	486	487	488	492.9
		Lo PR	127	131	134	139.8	127	139	142	147.3	127	145	149	153.9	150	151	154	159.5	155	153	160	165.0	162	162	167	171.9
85	2800	MBh	106.6	108.1	111.2	115.9	105.7	107.2	110.3	115.0	103.0	104.5	107.6	112.3	98.3	99.8	102.9	107.6	92.6	94.1	97.2	101.9	87.4	88.9	92.0	96.7
		S/T	0.91	0.84	0.72	0.6	0.91	0.85	0.73	0.6	0.94	0.88	0.75	0.6	0.98	0.91	0.78	0.6	1.00	0.96	0.82	0.7	1.00	1.00	0.90	0.7
		ΔT	31.36	29.51	26.05	22.5	31.31	29.46	26.00	22.4	31.57	29.72	26.26	22.7	31.29	29.44	25.98	22.4	30.08	29.19	25.73	22.1	28.39	28.87	26.89	23.3
		kW	5.92	5.92	5.91	6.0	6.62	6.61	6.60	6.7	7.39	7.39	7.38	7.4	8.23	8.23	8.22	8.3	9.17	9.16	9.15	9.2	10.27	10.26	10.25	10.3
		Amps	23.03	23.01	22.95	23.2	26.21	26.19	26.13	26.4	29.76	29.73	29.68	29.9	33.60	33.57	33.52	33.8	37.89	37.86	37.81	38.1	42.92	42.90	42.84	43.1
		Hi PR	255	257	258	262.7	295	296	298	302.6	337	338	340	344.4	382	383	385	389.3	431	432	433	437.8	482	483	485	489.6
		Lo PR	127	129	132	137.3	135	136	140	144.9	142	142	146	151.5	115	142	152	157.1	153	141	157	162.6	160	161	164	169.5
	3025	MBh	107.5	108.9	112.0	116.8	106.6	108.0	111.1	115.9	103.8	105.3	108.4	113.1	99.2	100.6	103.7	108.5	93.5	95.0	98.1	102.8	88.3	89.7	92.8	97.6
		S/T	0.95	0.88	0.75	0.6	0.96	0.89	0.76	0.6	0.99	0.92	0.79	0.6	1.00	0.95	0.81	0.7	1.00	1.00	0.85	0.7	1.00	1.00	0.94	0.8
		ΔT	30.72	28.87	25.41	21.8	30.67	28.82	25.36	21.8	30.93	29.08	25.62	22.0	29.81	28.80	25.34	21.8	28.09	28.53	25.09	21.5	26.53	26.97	26.25	22.7
		kW	5.94	5.94	5.93	6.0	6.64	6.63	6.62	6.7	7.41	7.41	7.40	7.5	8.25	8.25	8.24	8.3	9.19	9.19	9.17	9.2	10.29	10.29	10.27	10.3
		Amps	23.13	23.10	23.05	23.3	26.30	26.28	26.23	26.5	29.85	29.83	29.77	30.0	33.69	33.67	33.61	33.9	37.98	37.96	37.90	38.1	43.02	42.99	42.94	43.2
		Hi PR	257	258	260	264.0	297	298	299	303.9	338	339	341	345.6	383	384	386	390.6	432	433	435	439.1	484	485	486	490.9
		Lo PR	128	130	133	138.5	115	138	141	146.0	115	142	147	152.6	148	142	153	158.2	154	155	158	163.7	161	162	165	170.6
	3600	MBh	110.1	111.6	114.7	119.4	109.2	110.6	113.7	118.5	106.5	107.9	111.0	115.8	101.8	103.3	106.4	111.1	96.1	97.6	100.7	105.4	90.9	92.4	95.5	100.2
		S/T	1.00	0.98	0.83	0.7	1.00	0.98	0.83	0.7	1.00	1.00	0.86	0.7	1.00	1.00	0.89	0.7	1.00	1.00	0.93	0.8	1.00	1.00	1.00	0.8
		ΔT	27.80	27.48	24.02	20.4	27.57	27.43	23.97	20.4	26.88	27.25	24.23	20.6	25.71	26.08	23.95	20.4	24.27	24.64	23.71	20.1	22.95	23.32	24.11	21.3
		kW	5.99	5.98	5.97	6.0	6.68	6.68	6.67	6.7	7.46	7.45	7.44	7.5	8.30	8.29	8.28	8.3	9.24	9.23	9.22	9.3	10.33	10.33	10.32	10.4
		Amps	23.33	23.30	23.25	23.5	26.51	26.48	26.43	26.7	30.06	30.03	29.98	30.2	33.90	33.87	33.82	34.1	38.19	38.16	38.11	38.4	43.22	43.19	43.14	43.4
		Hi PR	260	261	263	267.2	300	301	303	307.0	342	343	344	348.8	387	388	389	393.8	435	436	438	442.3	487	488	490	494.0
		Lo PR	132	132	136	141.6	139	139	144	149.2	146	147	151	155.8	151	153	156	161.4	157	158	162	166.9	164	165	170	173.8

IDB: Entering Indoor Dry Bulb Temperature

Shaded area reflects ACCA (TVA) conditions

kW = Total system power

High and low pressures are measured at the liquid and suction access fittings.

Amps: Unit amps (comp.+ evaporator + condenser fan motors)

Design Subcooling, 16 - 19 °F @ the liquid access fitting connection ARI 95 test conditions. Design Superheat 8 - 12°F @ the compressor suction access fitting connection.

			Outdoor Ambient Temperature																							
			65				75				85				95				105				115			
			Entering Indoor Wet Bulb Temperature																							
IDB	Airflow	ID WB	59	63	67	71	59	63	67	71	59	63	67	71	59	63	67	71	59	63	67	71	59	63	67	71
70	3250	MBh	118.6	120.3	123.8	-	117.6	119.3	122.8	-	114.5	116.2	119.7	-	109.2	110.9	114.4	-	102.7	104.4	107.9	-	96.8	98.5	102.0	-
		S/T	0.54	0.48	0.38	-	0.54	0.48	0.38	-	0.57	0.50	0.40	-	0.58	0.52	0.41	-	0.61	0.55	0.42	-	0.69	0.62	0.48	-
		ΔT	17.91	16.21	13.04	-	17.87	16.17	12.99	-	18.11	16.41	13.23	-	17.85	16.15	12.98	-	17.62	15.92	12.75	-	18.69	16.99	13.81	-
		kW	6.74	6.74	6.72	-	7.53	7.52	7.51	-	8.40	8.40	8.38	-	9.35	9.34	9.33	-	10.41	10.40	10.39	-	11.65	11.64	11.63	-
		Amps	25.45	25.42	25.36	-	29.04	29.01	28.95	-	33.05	33.02	32.96	-	37.38	37.35	37.29	-	42.23	42.20	42.14	-	47.91	47.88	47.82	-
		Hi PR	260	261	263	-	301	302	304	-	343	344	346	-	389	391	392	-	439	440	442	-	492	493	495	-
		Lo PR	123	124	127	-	130	132	135	-	137	138	141	-	142	144	147	-	147	149	152	-	154	156	159	-
	3500	MBh	119.6	121.2	124.8	-	118.5	120.2	123.7	-	115.4	117.1	120.6	-	110.1	111.8	115.3	-	103.6	105.3	108.8	-	97.7	99.4	102.9	-
		S/T	0.56	0.50	0.39	-	0.56	0.50	0.39	-	0.59	0.52	0.40	-	0.60	0.54	0.41	-	0.63	0.56	0.43	-	0.71	0.64	0.50	-
		ΔT	17.35	15.65	12.48	-	17.31	15.61	12.43	-	17.54	15.85	12.67	-	17.29	15.59	12.42	-	17.06	15.36	12.19	-	18.13	16.43	13.25	-
		kW	6.76	6.76	6.74	-	7.55	7.54	7.53	-	8.42	8.42	8.40	-	9.37	9.37	9.35	-	10.43	10.42	10.41	-	11.67	11.67	11.65	-
		Amps	25.55	25.52	25.46	-	29.14	29.11	29.05	-	33.15	33.12	33.06	-	37.48	37.46	37.39	-	42.33	42.30	42.24	-	48.01	47.98	47.92	-
		Hi PR	261	262	264	-	302	303	305	-	345	346	348	-	391	392	394	-	440	441	443	-	493	494	496	-
		Lo PR	124	125	128	-	131	133	136	-	138	139	142	-	143	145	148	-	149	150	153	-	155	157	160	-
	4150	MBh	122.5	124.1	127.7	-	121.4	123.1	126.6	-	118.3	120.0	123.5	-	113.0	114.7	118.2	-	106.5	108.2	111.7	-	100.6	102.3	105.8	-
		S/T	0.60	0.53	0.40	-	0.60	0.53	0.40	-	0.63	0.56	0.42	-	0.65	0.57	0.43	-	0.68	0.60	0.45	-	0.77	0.68	0.52	-
		ΔT	16.11	14.41	11.23	-	16.06	14.36	11.19	-	16.30	14.60	11.43	-	16.04	14.34	11.17	-	15.82	14.12	10.94	-	16.88	15.18	12.01	-
		kW	6.81	6.81	6.79	-	7.60	7.59	7.58	-	8.47	8.47	8.45	-	9.42	9.41	9.40	-	10.48	10.47	10.46	-	11.72	11.71	11.70	-
		Amps	25.78	25.75	25.69	-	29.37	29.34	29.28	-	33.37	33.34	33.28	-	37.71	37.68	37.62	-	42.55	42.53	42.46	-	48.24	48.21	48.15	-
		Hi PR	264	265	267	-	305	306	308	-	348	349	351	-	394	395	397	-	443	445	446	-	496	498	499	-
		Lo PR	127	128	131	-	134	136	139	-	141	142	145	-	146	148	151	-	152	153	156	-	158	160	163	-
75	3250	MBh	118.7	120.4	123.9	129.3	117.7	119.3	122.9	128.2	114.6	116.2	119.8	125.2	109.3	110.9	114.5	119.9	102.8	104.5	108.0	113.4	96.9	98.5	102.1	107.5
		S/T	0.65	0.59	0.48	0.4	0.66	0.60	0.49	0.4	0.68	0.62	0.51	0.4	0.71	0.64	0.52	0.4	0.74	0.67	0.55	0.4	0.83	0.75	0.61	0.5
		ΔT	21.65	19.95	16.78	13.5	21.60	19.90	16.73	13.4	21.84	20.14	16.97	13.7	21.59	19.89	16.71	13.4	21.36	19.66	16.49	13.2	22.42	20.72	17.55	14.3
		kW	6.74	6.73	6.72	6.8	7.52	7.51	7.50	7.6	8.40	8.39	8.38	8.4	9.34	9.34	9.32	9.4	10.40	10.40	10.38	10.4	11.64	11.64	11.63	11.7
		Amps	25.43	25.40	25.34	25.6	29.02	28.99	28.93	29.2	33.02	32.99	32.93	33.2	37.36	37.33	37.27	37.5	42.20	42.18	42.11	42.4	47.89	47.86	47.80	48.1
		Hi PR	260	261	263	267.4	301	302	304	308.2	344	345	347	351.0	390	391	393	397.1	439	440	442	446.7	492	493	495	499.7
		Lo PR	123	124	127	132.5	130	132	135	139.9	137	138	141	146.4	140	144	147	151.9	147	149	152	157.3	154	156	159	164.0
	3500	MBh	119.6	121.3	124.8	130.2	118.6	120.2	123.8	129.2	115.5	117.2	120.7	126.1	110.2	111.9	115.4	120.8	103.7	105.4	108.9	114.3	97.8	99.5	103.0	108.4
		S/T	0.68	0.62	0.50	0.4	0.68	0.62	0.50	0.4	0.71	0.64	0.52	0.4	0.73	0.67	0.54	0.4	0.77	0.70	0.56	0.4	0.86	0.78	0.64	0.5
		ΔT	21.09	19.39	16.22	12.9	21.04	19.34	16.17	12.9	21.28	19.58	16.41	13.1	21.03	19.33	16.15	12.9	20.80	19.10	15.93	12.6	21.86	20.16	16.99	13.7
		kW	6.76	6.75	6.74	6.8	7.54	7.54	7.52	7.6	8.42	8.41	8.40	8.5	9.37	9.36	9.35	9.4	10.42	10.42	10.41	10.5	11.67	11.66	11.65	11.7
		Amps	25.53	25.50	25.44	25.7	29.12	29.09	29.03	29.3	33.12	33.10	33.03	33.3	37.46	37.43	37.37	37.6	42.31	42.28	42.22	42.5	47.99	47.96	47.90	48.2
		Hi PR	261	262	264	268.6	302	303	305	309.5	345	346	348	352.3	391	392	394	398.3	441	442	443	448.0	494	495	496	501.0
		Lo PR	124	125	128	133.5	131	133	136	141.0	138	139	142	147.5	139	145	148	152.9	149	150	153	158.3	155	157	160	165.1
	4150	MBh	122.5	124.2	127.7	133.1	121.5	123.1	126.7	132.1	118.4	120.1	123.6	129.0	113.1	114.8	118.3	123.7	106.6	108.3	111.8	117.2	100.7	102.4	105.9	111.3
		S/T	0.74	0.67	0.54	0.4	0.74	0.67	0.54	0.4	0.77	0.70	0.56	0.4	0.80	0.72	0.58	0.4	0.84	0.75	0.60	0.4	0.93	0.84	0.68	0.5
		ΔT	19.84	18.14	14.97	11.7	19.80	18.10	14.92	11.6	20.04	18.34	15.16	11.9	19.78	18.08	14.91	11.6	19.55	17.85	14.68	11.4	20.62	18.92	15.74	12.5
		kW	6.81	6.80	6.79	6.8	7.59	7.59	7.57	7.6	8.47	8.46	8.45	8.5	9.42	9.41	9.40	9.5	10.47	10.47	10.45	10.5	11.72	11.71	11.70	11.8
		Amps	25.75	25.72	25.66	25.9	29.34	29.31	29.25	29.5	33.35	33.32	33.26	33.5	37.69	37.66	37.60	37.9	42.53	42.50	42.44	42.7	48.21	48.19	48.12	48.4
		Hi PR	264	265	267	271.8	305	306	308	312.7	348	349	351	355.4	394	395	397	401.5	444	445	447	451.2	497	498	500	504.2
		Lo PR	127	128	131	136.6	134	136	139	144.0	139	142	145	150.5	140	148	151	156.0	152	153	156	161.4	139	160	163	168.1

IDB: Entering Indoor Dry Bulb Temperature

Shaded area reflects ACCA (TVA) conditions

kW = Total system power

High and low pressures are measured at the liquid and suction access fittings.

Amps: Unit amps (comp.+ evaporator + condenser fan motors)

Design Subcooling, 16 - 19 °F @ the liquid access fitting connection ARI 95 test conditions. Design Superheat 8 - 12°F @ the compressor suction access fitting connection.

			Outdoor Ambient Temperature																							
			65				75				85				95				105				115			
			Entering Indoor Wet Bulb Temperature																							
IDB	Airflow	ID WB	59	63	67	71	59	63	67	71	59	63	67	71	59	63	67	71	59	63	67	71	59	63	67	71
80	3250	MBh	119.3	121.0	124.5	129.9	118.3	119.9	123.5	128.8	115.2	116.9	120.4	125.8	109.9	111.6	115.1	120.5	103.4	105.1	108.6	114.0	97.5	99.2	102.7	108.1
		S/T	0.76	0.70	0.59	0.5	0.77	0.71	0.59	0.5	0.79	0.73	0.62	0.5	0.82	0.76	0.64	0.5	0.87	0.80	0.67	0.5	0.96	0.88	0.74	0.6
		ΔT	25.41	23.71	20.54	17.3	25.37	23.67	20.49	17.2	25.61	23.91	20.73	17.4	25.35	23.65	20.48	17.2	25.12	23.42	20.25	17.0	26.19	24.49	21.31	18.0
		kW	6.74	6.73	6.72	6.8	7.53	7.52	7.51	7.6	8.40	8.39	8.38	8.4	9.35	9.34	9.33	9.4	10.41	10.40	10.39	10.4	11.65	11.64	11.63	11.7
		Amps	25.44	25.42	25.35	25.6	29.03	29.01	28.94	29.2	33.04	33.01	32.95	33.2	37.38	37.35	37.29	37.6	42.22	42.19	42.13	42.4	47.91	47.88	47.82	48.1
		Hi PR	260	262	263	267.9	301	302	304	308.7	344	345	347	351.5	390	391	393	397.6	440	441	443	447.2	493	494	496	500.2
		Lo PR	123	125	128	133.0	128	132	135	140.5	128	139	142	146.9	143	144	147	152.4	148	150	153	157.8	127	156	159	164.6
	3500	MBh	120.2	121.9	125.4	130.8	119.2	120.9	124.4	129.8	116.1	117.8	121.3	126.7	110.8	112.5	116.0	121.4	104.3	106.0	109.5	114.9	98.4	100.1	103.6	109.0
		S/T	0.80	0.73	0.61	0.5	0.80	0.74	0.62	0.5	0.83	0.76	0.64	0.5	0.86	0.79	0.66	0.5	0.91	0.83	0.69	0.5	1.00	0.92	0.77	0.6
		ΔT	24.85	23.15	19.98	16.7	24.81	23.11	19.93	16.6	25.04	23.35	20.17	16.9	24.79	23.09	19.92	16.6	24.56	22.86	19.69	16.4	25.56	23.93	20.75	17.5
		kW	6.76	6.76	6.74	6.8	7.55	7.54	7.53	7.6	8.42	8.42	8.40	8.5	9.37	9.36	9.35	9.4	10.43	10.42	10.41	10.5	11.67	11.66	11.65	11.7
		Amps	25.55	25.52	25.46	25.7	29.14	29.11	29.05	29.3	33.14	33.11	33.05	33.3	37.48	37.45	37.39	37.7	42.32	42.30	42.23	42.5	48.01	47.98	47.92	48.2
		Hi PR	262	263	265	269.1	303	304	305	310.0	345	346	348	352.7	391	392	394	398.8	441	442	444	448.5	494	495	497	501.5
		Lo PR	124	126	129	134.1	128	133	136	141.5	138	140	143	148.0	144	145	148	153.5	127	151	154	158.9	156	157	160	165.6
	4150	MBh	123.1	124.8	128.3	133.7	122.1	123.8	127.3	132.7	119.0	120.7	124.2	129.6	113.7	115.4	118.9	124.3	107.2	108.9	112.4	117.8	101.3	103.0	106.5	111.9
		S/T	0.88	0.80	0.67	0.5	0.88	0.81	0.67	0.5	0.91	0.84	0.70	0.6	0.95	0.86	0.72	0.6	0.99	0.91	0.75	0.6	1.00	1.00	0.84	0.7
		ΔT	23.61	21.91	18.73	15.4	23.56	21.86	18.69	15.4	23.80	22.10	18.93	15.6	23.54	21.84	18.67	15.4	23.32	21.62	18.44	15.2	22.19	22.56	19.51	16.2
		kW	6.81	6.81	6.79	6.9	7.60	7.59	7.58	7.6	8.47	8.47	8.45	8.5	9.42	9.41	9.40	9.5	10.48	10.47	10.46	10.5	11.72	11.71	11.70	11.8
		Amps	25.77	25.74	25.68	26.0	29.36	29.33	29.27	29.5	33.37	33.34	33.28	33.6	37.70	37.68	37.61	37.9	42.55	42.52	42.46	42.7	48.23	48.21	48.14	48.4
		Hi PR	265	266	268	272.3	306	307	309	313.1	348	350	351	355.9	395	396	397	402.0	444	445	447	451.6	497	498	500	504.6
		Lo PR	127	129	132	137.1	127	136	139	144.5	127	143	146	151.0	127	148	151	156.5	127	152	157	161.9	159	162	163	168.7
85	3250	MBh	121.3	123.0	126.5	131.9	120.3	121.9	125.5	130.8	117.2	118.8	122.4	127.8	111.9	113.5	117.1	122.5	105.4	107.1	110.6	116.0	99.5	101.1	104.7	110.1
		S/T	0.85	0.79	0.67	0.6	0.85	0.79	0.68	0.6	0.88	0.82	0.70	0.6	0.92	0.85	0.73	0.6	0.97	0.89	0.76	0.6	1.00	0.98	0.84	0.7
		ΔT	28.75	27.05	23.88	20.6	28.70	27.00	23.83	20.5	28.94	27.24	24.07	20.8	28.69	26.99	23.81	20.5	28.46	26.76	23.59	20.3	27.83	27.82	24.65	21.4
		kW	6.76	6.75	6.74	6.8	7.54	7.53	7.52	7.6	8.42	8.41	8.40	8.5	9.36	9.36	9.34	9.4	10.42	10.42	10.40	10.5	11.66	11.66	11.64	11.7
		Amps	25.51	25.48	25.42	25.7	29.10	29.07	29.01	29.3	33.11	33.08	33.02	33.3	37.45	37.42	37.36	37.6	42.29	42.26	42.20	42.5	47.98	47.95	47.89	48.2
		Hi PR	262	263	265	269.1	302	304	305	309.9	345	346	348	352.7	391	392	394	398.8	441	442	444	448.4	494	495	497	501.4
		Lo PR	125	127	130	134.9	132	134	137	142.3	139	140	144	148.8	115	142	149	154.3	115	142	154	159.7	157	141	161	166.4
	3500	MBh	122.2	123.9	127.4	132.8	121.2	122.8	126.4	131.8	118.1	119.8	123.3	128.7	112.8	114.5	118.0	123.4	106.3	108.0	111.5	116.9	100.4	102.1	105.6	111.0
		S/T	0.89	0.82	0.70	0.6	0.89	0.83	0.71	0.6	0.93	0.86	0.73	0.6	0.96	0.89	0.76	0.6	1.00	0.93	0.79	0.7	1.00	1.00	0.88	0.7
		ΔT	28.19	26.49	23.32	20.0	28.14	26.44	23.27	20.0	28.38	26.68	23.51	20.2	28.13	26.43	23.25	20.0	27.61	26.20	23.03	19.7	26.08	26.51	24.09	20.8
		kW	6.78	6.77	6.76	6.8	7.56	7.56	7.54	7.6	8.44	8.43	8.42	8.5	9.39	9.38	9.37	9.4	10.44	10.44	10.42	10.5	11.69	11.68	11.67	11.7
		Amps	25.61	25.59	25.53	25.8	29.20	29.18	29.11	29.4	33.21	33.18	33.12	33.4	37.55	37.52	37.46	37.7	42.39	42.36	42.30	42.6	48.08	48.05	47.99	48.3
		Hi PR	263	264	266	270.3	304	305	307	311.2	346	348	349	354.0	393	394	396	400.0	442	443	445	449.7	495	496	498	502.7
		Lo PR	126	128	131	135.9	115	135	138	143.3	115	142	145	149.8	114	142	150	155.3	151	142	156	160.7	158	159	162	167.5
	4150	MBh	125.1	126.8	130.3	135.7	124.1	125.7	129.3	134.7	121.0	122.7	126.2	131.6	115.7	117.4	120.9	126.3	109.2	110.9	114.4	119.8	103.3	105.0	108.5	113.9
		S/T	0.98	0.91	0.77	0.6	0.99	0.91	0.78	0.6	1.00	0.95	0.81	0.7	1.00	0.98	0.83	0.7	1.00	1.00	0.87	0.7	1.00	1.00	0.96	0.8
		ΔT	26.94	25.24	22.07	18.8	26.90	25.20	22.02	18.7	26.51	25.44	22.26	19.0	25.34	25.18	22.01	18.7	23.92	24.29	21.78	18.5	22.63	22.99	22.84	19.6
		kW	6.83	6.82	6.81	6.9	7.61	7.61	7.59	7.7	8.49	8.48	8.47	8.5	9.43	9.43	9.41	9.5	10.49	10.49	10.47	10.5	11.74	11.73	11.72	11.8
		Amps	25.84	25.81	25.75	26.0	29.43	29.40	29.34	29.6	33.44	33.41	33.35	33.6	37.77	37.74	37.68	38.0	42.62	42.59	42.53	42.8	48.30	48.27	48.21	48.5
		Hi PR	266	267	269	273.5	307	308	310	314.4	350	351	353	357.1	396	397	399	403.2	445	447	448	452.9	498	500	501	505.9
		Lo PR	115	129	134	138.9	114	137	141	146.4	143	142	148	152.9	149	142	153	158.4	154	155	159	163.7	161	162	165	170.5

IDB: Entering Indoor Dry Bulb Temperature

Shaded area reflects ACCA (TVA) conditions

kW = Total system power

High and low pressures are measured at the liquid and suction access fittings.

Amps: Unit amps (comp.+ evaporator + condenser fan motors)

Design Subcooling, 16 - 19 °F @ the liquid access fitting connection ARI 95 test conditions. Design Superheat 8 - 12°F @ the compressor suction access fitting connection.

			Outdoor Ambient Temperature																							
			65				75				85				95				105				115			
			Entering Indoor Wet Bulb Temperature																							
IDB	Airflow	ID WB	59	63	67	71	59	63	67	71	59	63	67	71	59	63	67	71	59	63	67	71	59	63	67	71
70	3500	MBh	140.4	142.4	146.6	-	139.2	141.1	145.3	-	135.5	137.5	141.7	-	129.2	131.2	135.4	-	121.5	123.5	127.7	-	114.4	116.4	120.6	-
		S/T	0.58	0.52	0.40	-	0.58	0.52	0.41	-	0.61	0.54	0.42	-	0.63	0.56	0.43	-	0.66	0.58	0.45	-	0.74	0.66	0.52	-
		ΔT	21.08	19.09	15.37	-	21.03	19.04	15.31	-	21.31	19.32	15.59	-	21.01	19.02	15.29	-	20.74	18.75	15.03	-	21.99	20.00	16.28	-
		kW	8.25	8.24	8.22	-	9.25	9.24	9.23	-	10.37	10.37	10.35	-	11.59	11.58	11.56	-	12.94	12.93	12.91	-	14.53	14.52	14.50	-
		Amps	31.35	31.31	31.23	-	35.94	35.90	35.82	-	41.07	41.03	40.95	-	46.61	46.58	46.50	-	52.81	52.78	52.70	-	60.09	60.05	59.97	-
		Hi PR	264	265	267	-	306	307	309	-	349	350	352	-	396	397	399	-	447	448	450	-	500	502	503	-
		Lo PR	124	126	129	-	132	133	136	-	138	140	143	-	144	146	149	-	149	151	154	-	156	158	161	-
	3800	MBh	141.5	143.5	147.7	-	140.3	142.3	146.4	-	136.6	138.6	142.8	-	130.3	132.3	136.5	-	122.6	124.6	128.8	-	115.5	117.5	121.7	-
		S/T	0.60	0.53	0.41	-	0.60	0.54	0.42	-	0.63	0.56	0.44	-	0.65	0.58	0.45	-	0.68	0.60	0.46	-	0.77	0.69	0.53	-
		ΔT	20.35	18.36	14.64	-	20.30	18.30	14.58	-	20.58	18.58	14.86	-	20.28	18.28	14.56	-	20.01	18.02	14.29	-	21.26	19.27	15.54	-
		kW	8.28	8.27	8.26	-	9.28	9.28	9.26	-	10.40	10.40	10.38	-	11.62	11.61	11.59	-	12.97	12.96	12.95	-	14.56	14.55	14.54	-
		Amps	31.49	31.45	31.38	-	36.08	36.05	35.97	-	41.21	41.17	41.10	-	46.76	46.72	46.64	-	52.96	52.92	52.84	-	60.23	60.19	60.12	-
		Hi PR	265	267	268	-	307	308	310	-	351	352	354	-	397	399	400	-	448	449	451	-	502	503	505	-
		Lo PR	125	127	130	-	133	135	138	-	140	141	144	-	145	147	150	-	151	152	155	-	157	159	162	-
	4500	MBh	144.9	146.9	151.1	-	143.7	145.7	149.9	-	140.0	142.0	146.2	-	133.7	135.7	139.9	-	126.0	128.0	132.2	-	119.0	120.9	125.1	-
		S/T	0.65	0.57	0.43	-	0.65	0.57	0.43	-	0.68	0.60	0.45	-	0.70	0.61	0.46	-	0.73	0.64	0.48	-	0.82	0.73	0.56	-
		ΔT	18.90	16.91	13.19	-	18.85	16.85	13.13	-	19.13	17.13	13.41	-	18.83	16.83	13.11	-	18.56	16.57	12.84	-	19.81	17.81	14.09	-
		kW	8.34	8.34	8.32	-	9.35	9.34	9.32	-	10.47	10.46	10.44	-	11.68	11.67	11.65	-	13.03	13.03	13.01	-	14.62	14.61	14.60	-
		Amps	31.78	31.74	31.66	-	36.37	36.33	36.25	-	41.50	41.46	41.38	-	47.04	47.01	46.93	-	53.24	53.21	53.13	-	60.52	60.48	60.40	-
		Hi PR	269	270	272	-	310	311	313	-	354	355	357	-	401	402	404	-	451	452	454	-	505	506	508	-
		Lo PR	129	130	133	-	136	138	141	-	143	144	147	-	146	150	153	-	154	155	158	-	161	162	165	-
75	3500	MBh	141.1	143.1	147.3	153.7	139.9	141.8	146.0	152.4	136.2	138.2	142.4	148.8	129.9	131.9	136.1	142.5	122.2	124.2	128.4	134.8	115.1	117.1	121.3	127.7
		S/T	0.69	0.63	0.52	0.40	0.70	0.64	0.52	0.40	0.73	0.66	0.54	0.42	0.75	0.68	0.56	0.43	0.79	0.72	0.58	0.44	0.88	0.80	0.66	0.51
		ΔT	25.47	23.47	19.75	15.9	25.41	23.42	19.70	15.8	25.69	23.70	19.98	16.1	25.39	23.40	19.68	15.8	25.13	23.13	19.41	15.6	26.37	24.38	20.66	16.8
		kW	8.24	8.23	8.22	8.3	9.25	9.24	9.22	9.3	10.37	10.36	10.34	10.4	11.58	11.57	11.55	11.6	12.93	12.93	12.91	13.0	14.52	14.51	14.50	14.6
		Amps	31.32	31.28	31.20	31.6	35.91	35.87	35.79	36.1	41.04	41.00	40.92	41.3	46.58	46.55	46.47	46.8	52.78	52.75	52.67	53.0	60.06	60.02	59.94	60.3
		Hi PR	264	265	267	271.9	306	307	309	313.5	349	351	352	357.0	396	397	399	403.8	447	448	450	454.4	501	502	504	508.3
		Lo PR	124	126	129	134.3	132	133	137	141.8	138	140	143	148.4	139	146	149	153.9	149	151	154	159.4	156	158	161	165.0
	3800	MBh	142.3	144.3	148.5	154.9	141.1	143.1	147.2	153.7	137.4	139.4	143.6	150.0	131.1	133.1	137.3	143.7	123.4	125.4	129.6	136.0	116.3	118.3	122.5	128.9
		S/T	0.73	0.66	0.54	0.41	0.73	0.66	0.54	0.41	0.76	0.69	0.56	0.43	0.79	0.71	0.58	0.44	0.83	0.75	0.60	0.46	0.92	0.84	0.68	0.52
		ΔT	24.74	22.74	19.02	15.2	24.68	22.69	18.96	15.1	24.96	22.97	19.24	15.4	24.66	22.67	18.94	15.1	24.39	22.40	18.68	14.8	25.64	23.65	19.93	16.1
		kW	8.27	8.27	8.25	8.3	9.28	9.27	9.25	9.3	10.40	10.39	10.37	10.4	11.61	11.60	11.59	11.7	12.96	12.96	12.94	13.0	14.55	14.55	14.53	14.6
		Amps	31.46	31.43	31.35	31.7	36.05	36.02	35.94	36.3	41.18	41.14	41.07	41.4	46.73	46.69	46.61	47.0	52.93	52.89	52.81	53.2	60.20	60.16	60.09	60.4
		Hi PR	266	267	269	273.3	307	308	310	314.8	351	352	354	358.4	398	399	401	405.2	448	449	451	455.8	502	503	505	509.7
		Lo PR	125	127	130	135.4	133	135	138	143.0	140	141	144	149.5	139	147	150	155.1	151	150	155	160.6	157	159	162	167.4
	4500	MBh	145.7	147.7	151.9	158.3	144.5	146.5	150.7	157.1	140.8	142.8	147.0	153.4	134.5	136.5	140.7	147.1	126.8	128.8	133.0	139.4	119.8	121.7	125.9	132.3
		S/T	0.79	0.71	0.57	0.43	0.80	0.72	0.58	0.43	0.83	0.75	0.60	0.45	0.85	0.77	0.62	0.46	0.90	0.81	0.64	0.47	1.00	0.90	0.73	0.55
		ΔT	23.28	21.29	17.57	13.7	23.23	21.24	17.51	13.7	23.51	21.52	17.79	13.9	23.21	21.22	17.49	13.6	22.94	20.95	17.23	13.4	24.19	22.20	18.48	14.6
		kW	8.34	8.33	8.31	8.4	9.34	9.33	9.32	9.4	10.46	10.45	10.44	10.5	11.67	11.66	11.65	11.7	13.03	13.02	13.00	13.1	14.62	14.61	14.59	14.7
		Amps	31.75	31.71	31.63	32.0	36.34	36.30	36.22	36.6	41.47	41.43	41.35	41.7	47.01	46.98	46.90	47.3	53.21	53.18	53.10	53.4	60.49	60.45	60.37	60.7
		Hi PR	269	270	272	276.5	310	312	313	318.1	354	355	357	361.6	401	402	404	408.4	451	453	454	459.0	505	506	508	512.9
		Lo PR	129	130	133	138.5	136	138	141	146.0	139	144	147	152.6	139	150	153	158.2	154	154	158	163.6	140	162	165	170.5

IDB: Entering Indoor Dry Bulb Temperature

Shaded area reflects ACCA (TVA) conditions

kW = Total system power

High and low pressures are measured at the liquid and suction access fittings.

Amps: Unit amps (comp.+ evaporator + condenser fan motors)

Design Subcooling, 16 - 19 °F @ the liquid access fitting connection ARI 95 test conditions. Design Superheat 8 - 12°F @ the compressor suction access fitting connection.

			Outdoor Ambient Temperature																							
			65				75				85				95				105				115			
			Entering Indoor Wet Bulb Temperature																							
IDB	Airflow	ID WB	59	63	67	71	59	63	67	71	59	63	67	71	59	63	67	71	59	63	67	71	59	63	67	71
80	3500	MBh	141.8	143.8	148.0	154.4	140.6	142.6	146.8	153.2	136.9	138.9	143.1	149.5	130.6	132.6	136.8	143.2	122.9	124.9	129.1	135.5	115.9	117.9	122.1	128.5
		S/T	0.81	0.75	0.63	0.51	0.82	0.75	0.63	0.51	0.85	0.78	0.66	0.53	0.88	0.81	0.68	0.54	0.93	0.85	0.71	0.57	1.00	0.94	0.79	0.64
		ΔT	29.88	27.89	24.16	20.3	29.83	27.83	24.11	20.3	30.11	28.11	24.39	20.5	29.81	27.81	24.09	20.2	29.54	27.55	23.82	20.0	30.10	28.79	25.07	21.2
		kW	8.25	8.24	8.22	8.3	9.25	9.24	9.23	9.3	10.37	10.36	10.35	10.4	11.58	11.58	11.56	11.6	12.94	12.93	12.91	13.0	14.53	14.52	14.50	14.6
		Amps	31.34	31.30	31.23	31.6	35.93	35.90	35.82	36.2	41.06	41.02	40.95	41.3	46.61	46.57	46.49	46.8	52.81	52.77	52.69	53.0	60.08	60.04	59.96	60.3
		Hi PR	265	266	268	272.4	306	307	309	313.9	350	351	353	357.5	397	398	400	404.3	447	448	450	454.8	501	502	504	508.8
		Lo PR	125	126	130	134.8	127	134	137	142.3	127	141	144	148.9	145	146	149	154.5	150	149	155	160.0	157	158	162	166.8
	3800	MBh	143.1	145.0	149.2	155.6	141.8	143.8	148.0	154.4	138.1	140.1	144.3	150.7	131.8	133.8	138.0	144.4	124.1	126.1	130.3	136.7	117.1	119.1	123.3	129.7
		S/T	0.85	0.78	0.66	0.53	0.86	0.79	0.66	0.53	0.89	0.82	0.69	0.55	0.92	0.85	0.71	0.56	0.97	0.89	0.74	0.59	1.00	0.99	0.83	0.66
		ΔT	29.15	27.15	23.43	19.6	29.09	27.10	23.38	19.5	29.37	27.38	23.66	19.8	29.07	27.08	23.36	19.5	28.81	26.81	23.09	19.2	28.01	28.06	24.34	20.5
		kW	8.28	8.27	8.25	8.3	9.28	9.28	9.26	9.3	10.40	10.40	10.38	10.5	11.62	11.61	11.59	11.7	12.97	12.96	12.94	13.0	14.56	14.55	14.53	14.6
		Amps	31.49	31.45	31.37	31.7	36.08	36.04	35.96	36.3	41.20	41.17	41.09	41.4	46.75	46.72	46.64	47.0	52.95	52.92	52.84	53.2	60.22	60.19	60.11	60.5
		Hi PR	266	267	269	273.8	308	309	311	315.3	351	352	354	358.9	398	399	401	405.7	449	450	452	456.2	503	504	506	510.2
		Lo PR	126	128	131	136.0	127	135	138	143.5	140	142	145	150.1	146	147	150	155.7	128	151	156	161.1	158	148	163	168.0
	4500	MBh	146.5	148.5	152.6	159.1	145.2	147.2	151.4	157.8	141.5	143.5	147.7	154.1	135.2	137.2	141.4	147.8	127.5	129.5	133.7	140.1	120.5	122.5	126.7	133.1
		S/T	0.94	0.86	0.71	0.56	0.94	0.86	0.72	0.57	0.98	0.89	0.74	0.59	1.00	0.92	0.77	0.60	1.00	0.97	0.80	0.63	1.00	1.00	0.89	0.71
		ΔT	27.70	25.70	21.98	18.1	27.64	25.65	21.93	18.1	27.92	25.93	22.21	18.4	27.32	25.63	21.91	18.1	25.76	25.36	21.64	17.8	24.34	24.74	22.89	19.0
		kW	8.34	8.33	8.32	8.4	9.35	9.34	9.32	9.4	10.47	10.46	10.44	10.5	11.68	11.67	11.65	11.7	13.03	13.02	13.01	13.1	14.62	14.61	14.60	14.7
		Amps	31.77	31.73	31.66	32.0	36.36	36.33	36.25	36.6	41.49	41.45	41.38	41.7	47.04	47.00	46.92	47.3	53.24	53.20	53.12	53.5	60.51	60.47	60.40	60.7
		Hi PR	269	271	272	277.0	311	312	314	318.5	354	356	357	362.1	401	402	404	408.9	452	453	455	459.4	506	507	509	513.4
		Lo PR	128	131	134	139.0	128	138	141	146.6	128	145	148	153.1	149	150	153	158.7	154	152	159	164.2	158	157	162	171.0
85	3500	MBh	144.2	146.2	150.4	156.8	143.0	144.9	149.1	155.5	139.3	141.3	145.5	151.9	133.0	135.0	139.2	145.6	125.3	127.3	131.5	137.9	118.2	120.2	124.4	130.8
		S/T	0.90	0.84	0.72	0.59	0.91	0.84	0.72	0.60	0.94	0.87	0.75	0.62	0.98	0.90	0.77	0.64	1.00	0.95	0.81	0.67	1.00	1.00	0.90	0.74
		ΔT	33.79	31.80	28.08	24.2	33.74	31.75	28.02	24.2	34.02	32.03	28.30	24.4	33.72	31.73	28.00	24.1	32.54	31.46	27.74	23.9	30.71	31.23	28.99	25.1
		kW	8.27	8.26	8.24	8.3	9.27	9.26	9.25	9.3	10.39	10.38	10.37	10.4	11.60	11.60	11.58	11.7	12.96	12.95	12.93	13.0	14.55	14.54	14.52	14.6
		Amps	31.43	31.39	31.31	31.7	36.02	35.99	35.91	36.3	41.15	41.11	41.03	41.4	46.70	46.66	46.58	46.9	52.89	52.86	52.78	53.1	60.17	60.13	60.05	60.4
		Hi PR	266	267	269	273.6	308	309	311	315.2	351	352	354	358.7	398	399	401	405.6	448	450	451	456.1	502	504	505	510.0
		Lo PR	127	128	131	136.7	134	136	139	144.2	141	141	146	150.8	115	141	151	156.3	149	142	157	161.8	154	160	163	168.7
	3800	MBh	145.4	147.4	151.6	158.0	144.2	146.1	150.3	156.7	140.5	142.5	146.7	153.1	134.2	136.2	140.4	146.8	126.5	128.5	132.7	139.1	119.4	121.4	125.6	132.0
		S/T	0.95	0.88	0.75	0.62	0.96	0.89	0.76	0.62	0.99	0.92	0.79	0.65	1.00	0.95	0.81	0.67	1.00	1.00	0.85	0.70	1.00	1.00	0.94	0.77
		ΔT	33.06	31.07	27.35	23.5	33.01	31.01	27.29	23.4	33.29	31.29	27.57	23.7	32.10	30.99	27.27	23.4	30.26	30.73	27.00	23.1	28.57	29.05	28.25	24.4
		kW	8.30	8.29	8.27	8.4	9.30	9.29	9.28	9.4	10.42	10.41	10.40	10.5	11.63	11.63	11.61	11.7	12.99	12.98	12.96	13.0	14.58	14.57	14.55	14.6
		Amps	31.57	31.54	31.46	31.8	36.17	36.13	36.05	36.4	41.29	41.26	41.18	41.5	46.84	46.80	46.73	47.1	53.04	53.00	52.92	53.3	60.31	60.28	60.20	60.5
		Hi PR	267	269	270	275.0	309	310	312	316.6	353	354	355	360.1	399	401	402	407.0	450	451	453	457.5	504	505	507	511.4
		Lo PR	128	129	133	137.8	115	137	140	145.4	115	142	147	151.9	148	141	152	157.5	153	142	158	163.0	160	159	161	169.8
	4500	MBh	148.8	150.8	155.0	161.4	147.6	149.6	153.8	160.2	143.9	145.9	150.1	156.5	137.6	139.6	143.8	150.2	129.9	131.9	136.1	142.5	122.9	124.8	129.0	135.4
		S/T	1.00	0.97	0.83	0.68	1.00	0.98	0.83	0.68	1.00	1.00	0.86	0.70	1.00	1.00	0.89	0.72	1.00	1.00	0.93	0.75	1.00	1.00	1.00	0.84
		ΔT	30.07	29.62	25.90	22.0	29.81	29.56	25.84	22.0	29.07	29.47	26.12	22.3	27.80	28.20	25.82	22.0	26.24	26.64	25.55	21.7	24.82	25.22	26.07	22.9
		kW	8.36	8.35	8.34	8.4	9.36	9.36	9.34	9.4	10.48	10.48	10.46	10.5	11.70	11.69	11.67	11.7	13.05	13.04	13.03	13.1	14.64	14.63	14.62	14.7
		Amps	31.86	31.82	31.74	32.1	36.45	36.42	36.34	36.7	41.58	41.54	41.46	41.8	47.13	47.09	47.01	47.4	53.33	53.29	53.21	53.6	60.60	60.56	60.48	60.8
		Hi PR	271	272	274	278.2	312	313	315	319.8	356	357	359	363.3	403	404	406	410.2	453	454	456	460.7	507	508	510	514.6
		Lo PR	131	131	136	140.9	138	139	143	148.4	145	147	150	155.0	151	152	155	160.6	156	158	161	166.0	163	164	168	172.9

IDB: Entering Indoor Dry Bulb Temperature

Shaded area reflects ACCA (TVA) conditions

kW = Total system power

High and low pressures are measured at the liquid and suction access fittings.

Amps: Unit amps (comp.+ evaporator + condenser fan motors)

Design Subcooling, 16 - 19 °F @ the liquid access fitting connection ARI 95 test conditions. Design Superheat 8 - 12°F @ the compressor suction access fitting connection.

Heating

Model #	Min Airflow	EHXD-3M10	EHXD-3M15	EHXD-3M30	EHXD-3M20	EHXD-3M45	EHXD-3M60	EHXD-4M10	EHXD-4M15	EHXD-4M30	EHXD-4M20	EHXD-4M45	EHXD-4M60	EHXD-7M10	EHXD-7M15	EHXD-7M30	EHXD-7M20	EHXD-7M45	EHXD-7M60
DHC0903		X	X	X	X	X													
DHC0904	2500							X	X	X	X	X							
DHC0907														X	X	X	X	X	
DHC1023		X	X	X	X	X													
DHC1024	2850							X	X	X	X	X							
DHC1027														X	X	X	X	X	
DHC1023		X	X	X	X	X	X												
DHC1204	3150							X	X	X	X	X	X						
DHC1207														X	X	X	X	X	X
DHC1503		X	X	X	X	X	X												
DHC1504	3750							X	X	X	X	X	X						
DHC1507														X	X	X	X	X	X

7.5 Ton Cooler • Standard Static Direct Drive

Models: DHC0903D, DHC0904D, DHC0907D

Down Flow				
SPEED TAP	**ESP**	**CFM**	**RPM**	**BHP**
T1	0.2	2013	593	0.38
	0.4	1848	663	0.43
	0.6	1682	733	0.48
	0.8	1517	803	0.52
T2	0.2	2554	673	0.64
	0.4	2428	731	0.70
	0.6	2269	792	0.75
	0.8	2126	841	0.80
T3	0.2	3038	751	0.98
	0.4	2928	801	1.04
	0.6	2816	852	1.11
	0.8	2713	901	1.17
T4	0.2	3220	779	1.13
	0.4	3103	829	1.20
	0.6	3001	876	1.27
	0.8	2892	923	1.34
T5	0.2	3390	812	1.29
	0.4	3281	859	1.37
	0.6	3178	905	1.44
	0.8	3075	947	1.51
T6	0.2	3038	751	0.98
	0.4	2928	801	1.04
	0.6	2816	852	1.11
	0.8	2713	901	1.17
T7	0.2	3390	812	1.29
	0.4	3281	859	1.37
	0.6	3178	905	1.44
	0.8	3075	947	1.51
T8	0.2	3038	751	0.98
	0.4	2928	801	1.04
	0.6	2816	852	1.11
	0.8	2713	901	1.17
T9	0.2	3220	779	1.13
	0.4	3103	829	1.20
	0.6	3001	876	1.27
	0.8	2892	923	1.34
T10	0.2	3390	812	1.29
	0.4	3281	859	1.37
	0.6	3178	905	1.44
	0.8	3075	947	1.51

Horizontal Flow				
SPEED TAP	**ESP**	**CFM**	**RPM**	**BHP**
T1	0.2	1863	481	0.31
	0.4	1644	557	0.36
	0.6	-	-	-
	0.8	-	-	-
T2	0.2	2422	567	0.54
	0.4	2325	618	0.59
	0.6	2147	683	0.65
	0.8	1889	762	0.73
T3	0.2	2993	652	0.85
	0.4	2869	696	0.91
	0.6	2730	742	0.97
	0.8	2606	788	1.03
T4	0.2	3176	683	0.99
	0.4	3056	719	1.04
	0.6	2914	763	1.10
	0.8	2808	807	1.17
T5	0.2	3350	713	1.15
	0.4	3248	749	1.20
	0.6	3116	789	1.27
	0.8	3027	831	1.34
T6	0.2	2993	652	0.85
	0.4	2869	696	0.91
	0.6	2730	742	0.97
	0.8	2606	788	1.03
T7	0.2	3350	713	1.15
	0.4	3248	749	1.20
	0.6	3116	789	1.27
	0.8	3027	831	1.34
T8	0.2	2097	519	0.40
	0.4	2869	696	0.91
	0.6	2730	742	0.97
	0.8	2606	788	1.03
T9	0.2	3176	683	0.99
	0.4	3056	719	1.04
	0.6	2914	763	1.10
	0.8	2808	807	1.17
T10	0.2	3350	713	1.15
	0.4	3248	749	1.20
	0.6	3116	789	1.27
	0.8	3027	831	1.34

7.5 Ton Cooler • Medium Static Direct Drive

Models: DHC0903L, DHC0904L, DHC0907L

Down Flow				
SPEED TAP	**ESP**	**CFM**	**RPM**	**BHP**
T1	0.20	2013	593	0.38
	0.40	1848	663	0.43
	0.60	1682	733	0.48
	0.80	1517	803	0.52
	1.00	-	-	-
	1.20	-	-	-
	1.40	-	-	-
T2	0.2	3123	768	1.05
	0.4	3011	818	1.12
	0.6	2902	864	1.18
	0.8	2798	912	1.25
	1.0	2681	961	1.32
	1.2	2501	1010	1.38
	1.4	2266	1076	1.47
T3	0.2	3038	751	0.98
	0.4	2928	801	1.04
	0.6	2816	852	1.11
	0.8	2713	901	1.17
	1.0	2591	951	1.24
	1.2	2369	1003	1.31
	1.4	-	-	-
T4	0.2	3538	847	1.47
	0.4	3436	884	1.54
	0.6	3325	930	1.62
	0.8	3243	971	1.69
	1.0	3154	1017	1.77
	1.2	3040	1056	1.84
	1.4	2918	1095	1.90
T5	0.2	3675	866	1.63
	0.4	3577	906	1.70
	0.6	3483	948	1.78
	0.8	3385	988	1.86
	1.0	3300	1028	1.93
	1.2	3208	1070	2.01
	1.4	3112	1109	2.09
T6	0.2	3390	812	1.29
	0.4	3281	859	1.37
	0.6	3178	905	1.44
	0.8	3075	947	1.51
	1.0	2968	994	1.59
	1.2	2861	1036	1.65
	1.4	-	-	-
T7	0.2	3675	866	1.63
	0.4	3577	906	1.70
	0.6	3483	948	1.78
	0.8	3385	988	1.86
	1.0	3300	1028	1.93
	1.2	3208	1070	2.01
	1.4	3112	1109	2.09
T8	0.2	3390	812	1.29
	0.4	3281	859	1.37
	0.6	3178	905	1.44
	0.8	3075	947	1.51
	1.0	2968	994	1.59
	1.2	2861	1036	1.65
	1.4	-	-	-
T9	0.2	3538	847	1.47
	0.4	3436	884	1.54
	0.6	3325	930	1.62
	0.8	3243	971	1.69
	1.0	3154	1017	1.77
	1.2	3040	1056	1.84
	1.4	2918	1095	1.90
T10	0.2	3675	866	1.63
	0.4	3577	906	1.70
	0.6	3483	948	1.78
	0.8	3385	988	1.86
	1.0	3300	1028	1.93
	1.2	3208	1070	2.01
	1.4	3112	1109	2.09

Horizontal Flow				
SPEED TAP	**ESP**	**CFM**	**RPM**	**BHP**
T1	0.20	1863	481	0.31
	0.40	1644	557	0.36
	0.60	-	-	-
	0.80	-	-	-
	1.00	-	-	-
	1.20	-	-	-
	1.40	-	-	-
T2	0.20	3067	653	0.89
	0.40	2912	696	0.95
	0.60	2711	750	1.03
	0.80	2564	791	1.08
	1.00	2396	837	1.15
	1.20	2132	905	1.24
	1.40	1872	971	1.33
T3	0.2	2950	667	0.87
	0.4	2869	696	0.91
	0.6	2730	742	0.97
	0.8	2606	788	1.03
	1.0	2456	841	1.10
	1.2	-	-	-
	1.4	-	-	-
T4	0.2	3559	653	1.28
	0.4	3410	781	1.36
	0.6	3292	818	1.42
	0.8	3217	849	1.48
	1.0	3084	892	1.55
	1.2	2966	931	1.62
	1.4	2845	971	1.69
T5	0.2	3676	775	1.48
	0.4	3529	819	1.56
	0.6	3451	847	1.61
	0.8	3359	880	1.68
	1.0	3227	919	1.75
	1.2	3129	954	1.82
	1.4	3001	993	1.89
T6	0.2	3350	713	1.15
	0.4	3248	749	1.20
	0.6	3116	789	1.27
	0.8	3027	831	1.34
	1.0	2888	874	1.40
	1.2	2742	923	1.48
	1.4	2611	974	1.57
T7	0.2	3676	775	1.48
	0.4	3529	819	1.56
	0.6	3451	847	1.61
	0.8	3359	880	1.68
	1.0	3227	919	1.75
	1.2	3129	954	1.82
	1.4	3001	993	1.89
T8	0.2	3350	713	1.15
	0.4	3248	749	1.20
	0.6	3116	789	1.27
	0.8	3027	831	1.34
	1.0	2888	874	1.40
	1.2	2742	923	1.48
	1.4	2611	974	1.57
T9	0.2	3559	653	1.28
	0.4	3410	781	1.36
	0.6	3292	818	1.42
	0.8	3217	849	1.48
	1.0	3084	892	1.55
	1.2	2966	931	1.62
	1.4	2845	971	1.69
T10	0.2	3676	775	1.48
	0.4	3529	819	1.56
	0.6	3451	847	1.61
	0.8	3359	880	1.68
	1.0	3227	919	1.75
	1.2	3129	954	1.82
	1.4	3001	993	1.89

7.5 Ton Cooler • High Static Direct Drive

Models: DHC0903W, DHC0904W, DHC0907W

Down Flow				
SPEED TAP	**ESP**	**CFM**	**RPM**	**BHP**
T1	0.2	2013	593	0.38
	0.4	1848	663	0.43
	0.6	1682	733	0.48
	0.8	1517	803	0.52
	1.0	-	-	-
	1.2	-	-	-
	1.4	-	-	-
	1.6	-	-	-
	1.8	-	-	-
	2.0	-	-	-
T2	0.2	3220	779	1.13
	0.4	3103	829	1.20
	0.6	3001	876	1.27
	0.8	2892	923	1.34
	1.0	2782	971	1.40
	1.2	2653	1018	1.47
	1.4	2417	1095	1.58
	1.6	2202	1154	1.67
	1.8	2080	1192	1.72
	2.0	1947	1224	1.77
T3	0.2	3038	751	0.98
	0.4	2928	801	1.04
	0.6	2816	852	1.11
	0.8	2713	901	1.17
	1.0	2591	951	1.24
	1.2	2369	1003	1.31
	1.4	-	-	-
	1.6	-	-	-
	1.8	-	-	-
	2.0	-	-	-
T4	0.2	-	-	-
	0.4	-	-	-
	0.6	3696	956	1.94
	0.8	3543	1008	2.05
	1.0	3454	1047	2.13
	1.2	3376	1089	2.21
	1.4	3284	1126	2.29
	1.6	3189	1161	2.36
	1.8	3054	1217	2.47
	2.0	2822	1285	2.61
T5	0.2	-	-	-
	0.4	-	-	-
	0.6	-	-	-
	0.8	3676	1026	2.23
	1.0	3592	1061	2.31
	1.2	3522	1095	2.38
	1.4	3441	1141	2.48
	1.6	3343	1178	2.56
	1.8	3234	1218	2.65
	2.0	3164	1246	2.71
T6	0.2	3586	881	1.66
	0.4	3577	906	1.70
	0.6	3483	948	1.78
	0.8	3385	988	1.86
	1.0	3300	1028	1.93
	1.2	3208	1070	2.01
	1.4	3112	1109	2.09
	1.6	2995	1150	2.16
	1.8	2874	1197	2.25
	2.0	2573	1279	2.41

Horizontal Flow				
SPEED TAP	**ESP**	**CFM**	**RPM**	**BHP**
T1	0.2	1863	481	0.31
	0.4	1644	557	0.36
	0.6	-	-	-
	0.8	-	-	-
	1.0	-	-	-
	1.2	-	-	-
	1.4	-	-	-
	1.6	-	-	-
	1.8	-	-	-
	2.0	-	-	-
T2	0.2	3152	684	0.99
	0.4	3056	719	1.04
	0.6	2899	768	1.11
	0.8	2808	807	1.17
	1.0	2647	851	1.23
	1.2	2476	910	1.32
	1.4	2182	987	1.43
	1.6	2014	1034	1.50
	1.8	1886	1068	1.54
	2.0	1764	1102	1.59
T3	0.2	2993	652	0.85
	0.4	2869	696	0.91
	0.6	2730	742	0.97
	0.8	2606	788	1.03
	1.0	2456	841	1.10
	1.2	2333	884	1.15
	1.4	-	-	-
	1.6	-	-	-
	1.8	-	-	-
	2.0	-	-	-
T4	0.2	-	-	-
	0.4	-	-	-
	0.6	3644	851	1.73
	0.8	3496	897	1.82
	1.0	3378	933	1.89
	1.2	3281	969	1.97
	1.4	3165	1004	2.04
	1.6	3029	1046	2.12
	1.8	2901	1088	2.21
	2.0	2719	1140	2.31
T5	0.2	-	-	-
	0.4	-	-	-
	0.6	-	-	-
	0.8	3629	927	2.02
	1.0	3533	958	2.09
	1.2	3448	988	2.15
	1.4	3342	1021	2.22
	1.6	3230	1057	2.30
	1.8	3114	1095	2.38
	2.0	2976	1142	2.49
T6	0.2	3586	764	1.47
	0.4	3529	819	1.56
	0.6	3451	847	1.61
	0.8	3359	880	1.68
	1.0	3227	919	1.75
	1.2	3129	954	1.82
	1.4	3001	993	1.89
	1.6	2840	1040	1.98
	1.8	2702	1085	2.07
	2.0	2471	1142	2.18

7.5 Ton Cooler • High Static Direct Drive

Models: DHC0903W, DHC0904W, DHC0907W

Down Flow				
Speed Tap	**ESP**	**CFM**	**RPM**	**BHP**
T7	0.2	-	-	-
	0.4	-	-	-
	0.6	-	-	-
	0.8	3676	1026	2.23
	1.0	3592	1061	2.31
	1.2	3522	1095	2.38
	1.4	3441	1141	2.48
	1.6	3343	1178	2.56
	1.8	3234	1218	2.65
	2.0	3164	1246	2.71
T8	0.2	3586	881	1.66
	0.4	3577	906	1.70
	0.6	3483	948	1.78
	0.8	3385	988	1.86
	1.0	3300	1028	1.93
	1.2	3208	1070	2.01
	1.4	3112	1109	2.09
	1.6	2995	1150	2.16
	1.8	2874	1197	2.25
	2.0	2573	1279	2.41
T9	0.2	-	-	-
	0.4	-	-	-
	0.6	3696	956	1.94
	0.8	3543	1008	2.05
	1.0	3454	1047	2.13
	1.2	3376	1089	2.21
	1.4	3284	1126	2.29
	1.6	3189	1161	2.36
	1.8	3054	1217	2.47
	2.0	2822	1285	2.61
T10	0.2	-	-	-
	0.4	-	-	-
	0.6	-	-	-
	0.8	3676	1026	2.23
	1.0	3592	1061	2.31
	1.2	3522	1095	2.38
	1.4	3441	1141	2.48
	1.6	3343	1178	2.56
	1.8	3234	1218	2.65
	2.0	3164	1246	2.71

Horizontal Flow				
Speed Tap	**ESP**	**CFM**	**RPM**	**BHP**
T7	0.2	-	-	-
	0.4	-	-	-
	0.6	-	-	-
	0.8	3629	927	2.02
	1.0	3533	958	2.09
	1.2	3448	988	2.15
	1.4	3342	1021	2.22
	1.6	3230	1057	2.30
	1.8	3114	1095	2.38
	2.0	2976	1142	2.49
T8	0.2	3586	764	1.47
	0.4	3529	819	1.56
	0.6	3451	847	1.61
	0.8	3359	880	1.68
	1.0	3227	919	1.75
	1.2	3129	954	1.82
	1.4	3001	993	1.89
	1.6	2840	1040	1.98
	1.8	2702	1085	2.07
	2.0	2471	1142	2.18
T9	0.2	-	-	-
	0.4	-	-	-
	0.6	3644	851	1.73
	0.8	3496	897	1.82
	1.0	3378	933	1.89
	1.2	3281	969	1.97
	1.4	3165	1004	2.04
	1.6	3029	1046	2.12
	1.8	2901	1088	2.21
	2.0	2719	1140	2.31
T10	0.2	-	-	-
	0.4	-	-	-
	0.6	-	-	-
	0.8	3629	927	2.02
	1.0	3533	958	2.09
	1.2	3448	988	2.15
	1.4	3342	1021	2.22
	1.6	3230	1057	2.30
	1.8	3114	1095	2.38
	2.0	2976	1142	2.49

8.5 Ton Cooler • Standard Static Direct Drive

Models: DHC1023D, DHC1024D, DHC1027D

Down Flow				
SPEED TAP	ESP	CFM	RPM	BHP
T1	0.2	2160	472	0.37
	0.4	1958	530	0.41
	0.6	-	-	-
	0.8	-	-	-
T2	0.2	2805	564	0.64
	0.4	2638	619	0.70
	0.6	2435	676	0.76
	0.8	2256	723	0.82
T3	0.2	3131	609	0.83
	0.4	2967	657	0.90
	0.6	2774	709	0.97
	0.8	2605	750	1.03
T4	0.2	3366	644	1.00
	0.4	3222	689	1.08
	0.6	3055	738	1.15
	0.8	2891	778	1.21
T5	0.2	3824	703	1.36
	0.4	3704	743	1.43
	0.6	3531	773	1.50
	0.8	3414	823	1.60
T6	0.2	3131	609	0.83
	0.4	2967	657	0.90
	0.6	2774	709	0.97
	0.8	-	-	-
T7	0.2	3824	703	1.36
	0.4	3704	743	1.43
	0.6	3531	773	1.50
	0.8	3414	823	1.60
T8	0.2	3131	609	0.83
	0.4	2967	657	0.90
	0.6	2774	709	0.97
	0.8	-	-	-
T9	0.2	3366	644	1.00
	0.4	3222	689	1.08
	0.6	3055	738	1.15
	0.8	2891	778	1.21
T10	0.2	3824	703	1.36
	0.4	3704	743	1.43
	0.6	3531	773	1.50
	0.8	3414	823	1.60

Horizontal Flow				
SPEED TAP	ESP	CFM	RPM	BHP
T1	0.2	2209	462	0.36
	0.4	2046	524	0.41
	0.6	-	-	-
	0.8	-	-	-
T2	0.2	2822	557	0.63
	0.4	2693	609	0.69
	0.6	2534	663	0.75
	0.8	2451	706	0.80
T3	0.2	3133	601	0.82
	0.4	3017	647	0.89
	0.6	2858	699	0.96
	0.8	2787	735	1.01
T4	0.2	3381	642	1.00
	0.4	3274	685	1.07
	0.6	3143	733	1.14
	0.8	3058	768	1.20
T5	0.2	3806	697	1.34
	0.4	3727	734	1.42
	0.6	3590	781	1.49
	0.8	3556	820	1.58
T6	0.2	3133	601	0.82
	0.4	3017	647	0.89
	0.6	2858	699	0.96
	0.8	2787	735	1.01
T7	0.2	3806	697	1.34
	0.4	3727	734	1.42
	0.6	3590	781	1.49
	0.8	3556	820	1.58
T8	0.2	3133	601	0.82
	0.4	3017	647	0.89
	0.6	2858	699	0.96
	0.8	2787	735	1.01
T9	0.2	3381	642	1.00
	0.4	3274	685	1.07
	0.6	3143	733	1.14
	0.8	3058	768	1.20
T10	0.2	3806	697	1.34
	0.4	3727	734	1.42
	0.6	3590	781	1.49
	0.8	3556	820	1.58

8.5 Ton Cooler • Medium Static Direct Drive

Models: DHC1023L, DHC1024L, DHC1027L

Down Flow				
SPEED TAP	ESP	CFM	RPM	BHP
T1	0.2	2160	472	0.37
	0.4	1958	530	0.41
	0.6	1703	601	0.46
	0.8	-	-	-
	1.0	-	-	-
	1.2	-	-	-
	1.4	-	-	-
T2	0.2	3366	644	1.00
	0.4	3222	689	1.08
	0.6	3055	738	1.15
	0.8	2891	778	1.21
	1.0	2680	829	1.29
	1.2	2478	872	1.36
	1.4	2274	908	1.42
T3	0.2	3131	609	0.83
	0.4	2967	657	0.90
	0.6	2774	709	0.97
	0.8	2605	750	1.03
	1.0	-	-	-
	1.2	-	-	-
	1.4	-	-	-
T4	0.2	3814	703	1.34
	0.4	3652	747	1.42
	0.6	3489	790	1.50
	0.8	3305	832	1.59
	1.0	3125	872	1.66
	1.2	2941	912	1.74
	1.4	-	-	-
T5	0.2	-	-	-
	0.4	4246	810	1.76
	0.6	4022	846	1.85
	0.8	3854	881	1.94
	1.0	3685	917	2.03
	1.2	3572	952	2.11
	1.4	3348	987	2.20
T6	0.2	3565	671	1.15
	0.4	3412	715	1.22
	0.6	3247	760	1.30
	0.8	3089	795	1.36
	1.0	2874	846	1.45
	1.2	-	-	-
	1.4	-	-	-
T7	0.2	-	-	-
	0.4	4246	810	1.76
	0.6	4022	846	1.85
	0.8	3854	881	1.94
	1.0	3685	917	2.03
	1.2	3572	952	2.11
	1.4	3348	987	2.20
T8	0.2	3565	671	1.15
	0.4	3412	715	1.22
	0.6	3247	760	1.30
	0.8	3089	795	1.36
	1.0	2874	846	1.45
	1.2	-	-	-
	1.4	-	-	-
T9	0.2	3814	703	1.34
	0.4	3652	747	1.42
	0.6	3489	790	1.50
	0.8	3305	832	1.59
	1.0	3125	872	1.66
	1.2	2941	912	1.74
	1.4	-	-	-
T10	0.2	-	-	-
	0.4	4246	810	1.76
	0.6	4022	846	1.85
	0.8	3854	881	1.94
	1.0	3685	917	2.03
	1.2	3572	952	2.11
	1.4	3348	987	2.20

Horizontal Flow				
SPEED TAP	ESP	CFM	RPM	BHP
T1	0.2	2209	462	0.36
	0.4	2046	524	0.41
	0.6	1841	600	0.46
	0.8	-	-	-
	1.0	-	-	-
	1.2	-	-	-
	1.4	-	-	-
T2	0.2	3381	642	1.00
	0.4	3274	685	1.07
	0.6	3143	733	1.14
	0.8	3058	768	1.20
	1.0	2900	821	1.28
	1.2	2784	860	1.34
	1.4	2672	895	1.40
T3	0.2	3133	601	0.82
	0.4	3017	647	0.89
	0.6	2858	699	0.96
	0.8	2787	735	1.01
	1.0	2630	787	1.08
	1.2	-	-	-
	1.4	-	-	-
T4	0.2	3804	692	1.32
	0.4	3698	735	1.40
	0.6	3595	776	1.48
	0.8	3480	817	1.56
	1.0	3364	856	1.63
	1.2	3260	893	1.70
	1.4	3151	931	1.77
T5	0.2	-	-	-
	0.4	4220	795	1.73
	0.6	4127	828	1.81
	0.8	4033	862	1.90
	1.0	3940	894	1.98
	1.2	3846	929	2.06
	1.4	3753	963	2.15
T6	0.2	3560	660	1.13
	0.4	3452	704	1.20
	0.6	3330	748	1.28
	0.8	3251	787	1.35
	1.0	3111	834	1.42
	1.2	3018	869	1.48
	1.4	2918	907	1.55
T7	0.2	-	-	-
	0.4	4220	795	1.73
	0.6	4127	828	1.81
	0.8	4033	862	1.90
	1.0	3940	894	1.98
	1.2	3846	929	2.06
	1.4	3753	963	2.15
T8	0.2	3560	660	1.13
	0.4	3452	704	1.20
	0.6	3330	748	1.28
	0.8	3251	787	1.35
	1.0	3111	834	1.42
	1.2	3018	869	1.48
	1.4	2918	907	1.55
T9	0.2	3804	692	1.32
	0.4	3698	735	1.40
	0.6	3595	776	1.48
	0.8	3480	817	1.56
	1.0	3364	856	1.63
	1.2	3260	893	1.70
	1.4	3151	931	1.77
T10	0.2	-	-	-
	0.4	4220	795	1.73
	0.6	4127	828	1.81
	0.8	4033	862	1.90
	1.0	3940	894	1.98
	1.2	3846	929	2.06
	1.4	3753	963	2.15

8.5 Ton Cooler • High Static Direct Drive

Models: DHC1023W, DHC1024W, DHC1027W

Down Flow				
SPEED TAP	ESP	CFM	RPM	BHP
T1	0.2	2160	472	0.37
	0.4	1958	530	0.41
	0.6	1703	601	0.46
	0.8	-	-	-
	1.0	-	-	-
	1.2	-	-	-
	1.4	-	-	-
	1.6	-	-	-
	1.8	-	-	-
	2.0	-	-	-
T2	0.2	3814	703	1.34
	0.4	3652	747	1.42
	0.6	3489	790	1.50
	0.8	3305	832	1.59
	1.0	3125	872	1.66
	1.2	2941	912	1.74
	1.4	2743	952	1.81
	1.6	2559	987	1.88
	1.8	2366	1021	1.94
	2.0	2212	1048	2.00
T3	0.2	3131	609	0.83
	0.4	2967	657	0.90
	0.6	2774	709	0.97
	0.8	2605	750	1.03
	1.0	-	-	-
	1.2	-	-	-
	1.4	-	-	-
	1.6	-	-	-
	1.8	-	-	-
	2.0	-	-	-
T4	0.2	-	-	-
	0.4	-	-	-
	0.6	4136	866	2.13
	0.8	3938	906	2.23
	1.0	3756	941	2.32
	1.2	3582	977	2.41
	1.4	3379	1011	2.49
	1.6	3208	1043	2.57
	1.8	3024	1081	2.66
	2.0	2816	1099	2.71
T5	0.2	-	-	-
	0.4	-	-	-
	0.6	-	-	-
	0.8	-	-	-
	1.0	4124	975	2.71
	1.2	3958	1008	2.81
	1.4	3757	1040	2.90
	1.6	3584	1071	2.98
	1.8	3395	1102	3.07
	2.0	3209	1130	3.15
T6	0.2	4123	746	1.62
	0.4	3966	787	1.71
	0.6	3807	827	1.79
	0.8	3628	867	1.88
	1.0	3460	905	1.96
	1.2	3275	942	2.0
	1.4	3085	980	2.12
	1.6	2908	1013	2.19
	1.8	-	-	-
	2.0	-	-	-

Horizontal Flow				
SPEED TAP	ESP	CFM	RPM	BHP
T1	0.2	2209	462	0.36
	0.4	2046	524	0.41
	0.6	1841	600	0.46
	0.8	-	-	-
	1.0	-	-	-
	1.2	-	-	-
	1.4	-	-	-
	1.6	-	-	-
	1.8	-	-	-
	2.0	-	-	-
T2	0.2	3804	692	1.32
	0.4	3698	735	1.40
	0.6	3595	776	1.48
	0.8	3480	817	1.56
	1.0	3364	856	1.63
	1.2	3260	893	1.70
	1.4	3151	931	1.77
	1.6	3040	962	1.83
	1.8	2932	993	1.89
	2.0	2815	1025	1.95
T3	0.2	3133	601	0.82
	0.4	3017	647	0.89
	0.6	2858	699	0.96
	0.8	2787	735	1.01
	1.0	2630	787	1.08
	1.2	-	-	-
	1.4	-	-	-
	1.6	-	-	-
	1.8	-	-	-
	2.0	-	-	-
T4	0.2	4246	843	2.08
	0.4	4137	873	2.15
	0.6	4028	904	2.23
	0.8	3952	929	2.29
	1.0	3867	956	2.36
	1.2	3787	982	2.42
	1.4	3712	1008	2.48
	1.6	3643	1034	2.55
	1.8	3603	1054	2.60
	2.0	3500	1087	2.68
T5	0.2	-	-	-
	0.4	-	-	-
	0.6	-	-	-
	0.8	-	-	-
	1.0	-	-	-
	1.2	4251	984	2.74
	1.4	4143	1018	2.84
	1.6	4050	1049	2.92
	1.8	3952	1081	3.01
	2.0	3847	1112	3.10
T6	0.2	4124	729	1.58
	0.4	4013	771	1.67
	0.6	3905	811	1.76
	0.8	3797	850	1.84
	1.0	3689	886	1.92
	1.2	3586	923	2.0
	1.4	3479	958	2.08
	1.6	3380	991	2.15
	1.8	3289	1023	2.22
	2.0	3174	1051	2.28

8.5 Ton Cooler • High Static Direct Drive

Models: DHC1023W, DHC1024W, DHC1027W

Down Flow				
Speed Tap	**ESP**	**CFM**	**RPM**	**BHP**
T7	0.2	-	-	-
	0.4	-	-	-
	0.6	-	-	-
	0.8	-	-	-
	1.0	4124	975	2.71
	1.2	3958	1008	2.81
	1.4	3757	1040	2.90
	1.6	3584	1071	2.98
	1.8	3395	1102	3.07
	2.0	3209	1130	3.15
T8	0.2	4123	746	1.62
	0.4	3966	787	1.71
	0.6	3807	827	1.79
	0.8	3628	867	1.88
	1.0	3460	905	1.96
	1.2	3275	942	2.0
	1.4	3085	980	2.12
	1.6	2908	1013	2.19
	1.8	-	-	-
	2.0	-	-	-
T9	0.2	-	-	-
	0.4	-	-	-
	0.6	4136	866	2.13
	0.8	3938	906	2.23
	1.0	3756	941	2.32
	1.2	3582	977	2.41
	1.4	3379	1011	2.49
	1.6	3208	1043	2.57
	1.8	3024	1081	2.66
	2.0	2816	1099	2.71
T10	0.2	-	-	-
	0.4	-	-	-
	0.6	-	-	-
	0.8	-	-	-
	1.0	4124	975	2.71
	1.2	3958	1008	2.81
	1.4	3757	1040	2.90
	1.6	3584	1071	2.98
	1.8	3395	1102	3.07
	2.0	3209	1130	3.15

Horizontal Flow				
Speed Tap	**ESP**	**CFM**	**RPM**	**BHP**
T7	0.2	-	-	-
	0.4	-	-	-
	0.6	-	-	-
	0.8	-	-	-
	1.0	-	-	-
	1.2	4251	984	2.74
	1.4	4143	1018	2.84
	1.6	4050	1049	2.92
	1.8	3952	1081	3.01
	2.0	3847	1112	3.10
T8	0.2	4124	729	1.58
	0.4	4013	771	1.67
	0.6	3905	811	1.76
	0.8	3797	850	1.84
	1.0	3689	886	1.92
	1.2	3586	923	2.0
	1.4	3479	958	2.08
	1.6	3380	991	2.15
	1.8	3289	1023	2.22
	2.0	3174	1051	2.28
T9	0.2	4246	843	2.08
	0.4	4137	873	2.15
	0.6	4028	904	2.23
	0.8	3952	929	2.29
	1.0	3867	956	2.36
	1.2	3787	982	2.42
	1.4	3712	1008	2.48
	1.6	3643	1034	2.55
	1.8	3603	1054	2.60
	2.0	3500	1087	2.68
T10	0.2	-	-	-
	0.4	-	-	-
	0.6	-	-	-
	0.8	-	-	-
	1.0	-	-	-
	1.2	4251	984	2.74
	1.4	4143	1018	2.84
	1.6	4050	1049	2.92
	1.8	3952	1081	3.01
	2.0	3847	1112	3.10

10.0 Ton Cooler • Standard Static Direct Drive

Models: DHC1203D, DHC1204D, DHC1207D

Down Flow				
SPEED TAP	**ESP**	**CFM**	**RPM**	**BHP**
T1	0.2	2217	420	0.32
	0.4	2010	507	0.38
	0.6	-	-	-
	0.8	-	-	-
T2	0.2	3329	554	0.76
	0.4	3207	606	0.83
	0.6	3013	672	0.92
	0.8	2748	751	1.03
T3	0.2	3702	596	0.97
	0.4	3587	644	1.05
	0.6	3402	702	1.14
	0.8	3280	751	1.23
T4	0.2	4280	662	1.39
	0.4	4143	709	1.49
	0.6	4005	756	1.58
	0.8	3886	802	1.68
T5	0.2	4485	685	1.56
	0.4	4357	732	1.66
	0.6	4225	778	1.77
	0.8	4113	822	1.87
T6	0.2	3702	596	0.97
	0.4	3587	644	1.05
	0.6	3402	702	1.14
	0.8	3280	751	1.23
T7	0.2	4485	685	1.56
	0.4	4357	732	1.66
	0.6	4225	778	1.77
	0.8	4113	822	1.87
T8	0.2	3702	596	0.97
	0.4	3587	644	1.05
	0.6	3402	702	1.14
	0.8	3280	751	1.23
T9	0.2	4280	662	1.39
	0.4	4143	709	1.49
	0.6	4005	756	1.58
	0.8	3886	802	1.68
T10	0.2	4485	685	1.56
	0.4	4357	732	1.66
	0.6	4225	778	1.77
	0.8	4113	822	1.87

Horizontal Flow				
SPEED TAP	**ESP**	**CFM**	**RPM**	**BHP**
T1	0.2	2246	427	0.32
	0.4	1986	518	0.39
	0.6	-	-	-
	0.8	-	-	-
T2	0.2	3318	567	0.78
	0.4	3173	626	0.86
	0.6	2965	693	0.95
	0.8	2694	768	1.05
T3	0.2	3704	604	0.99
	0.4	3577	658	1.07
	0.6	3388	720	1.17
	0.8	3250	770	1.26
T4	0.2	4220	681	1.43
	0.4	4093	728	1.53
	0.6	3982	770	1.61
	0.8	3824	826	1.73
T5	0.2	4436	705	1.60
	0.4	4307	751	1.71
	0.6	4196	790	1.80
	0.8	4040	847	1.93
T6	0.2	3704	604	0.99
	0.4	3577	658	1.07
	0.6	3388	720	1.17
	0.8	3250	770	1.26
T7	0.2	4436	705	1.60
	0.4	4307	751	1.71
	0.6	4196	790	1.80
	0.8	4040	847	1.93
T8	0.2	3704	604	0.99
	0.4	3577	658	1.07
	0.6	3388	720	1.17
	0.8	3250	770	1.26
T9	0.2	4220	681	1.43
	0.4	4093	728	1.53
	0.6	3982	770	1.61
	0.8	3824	826	1.73
T10	0.2	4436	705	1.60
	0.4	4307	751	1.71
	0.6	4196	790	1.80
	0.8	4040	847	1.93

10.0 Ton Cooler • Medium Static Direct Drive

Models: DHC1203L, DHC1204L, DHC1207L

Down Flow					Horizontal Flow				
SPEED TAP	ESP	CFM	RPM	BHP	SPEED TAP	ESP	CFM	RPM	BHP
T1	0.2	2217	420	0.32	T1	0.2	2246	427	0.32
	0.4	2010	507	0.38		0.4	1986	518	0.39
	0.6	-	-	-		0.6	-	-	-
	0.8	-	-	-		0.8	-	-	-
	1.0	-	-	-		1.0	-	-	-
	1.2	-	-	-		1.2	-	-	-
	1.4	-	-	-		1.4	-	-	-
T2	0.2	3833	610	1.05	T2	0.2	3823	622	1.07
	0.4	3731	656	1.13		0.4	3713	667	1.15
	0.6	3554	714	1.23		0.6	3532	723	1.25
	0.8	3434	763	1.32		0.8	3398	775	1.34
	1.0	3271	818	1.41		1.0	3223	833	1.44
	1.2	2968	894	1.54		1.2	2917	909	1.57
	1.4	2655	971	1.68		1.4	2598	988	1.71
T3	0.2	3702	596	0.97	T3	0.2	3704	604	0.99
	0.4	3587	644	1.05		0.4	3577	658	1.07
	0.6	3402	702	1.14		0.6	3388	720	1.17
	0.8	3280	751	1.23		0.8	3250	770	1.26
	1.0	3122	806	1.31		1.0	3077	824	1.34
	1.2	-	-	-		1.2	-	-	-
	1.4	-	-	-		1.4	-	-	-
T4	0.2	4595	699	1.66	T4	0.2	4546	717	1.71
	0.4	4470	744	1.77		0.4	4425	761	1.81
	0.6	4341	789	1.88		0.6	4314	803	1.91
	0.8	4234	833	1.98		0.8	4170	853	2.03
	1.0	4123	875	2.08		1.0	4039	909	2.16
	1.2	4002	918	2.18		1.2	3918	943	2.24
	1.4	3882	961	2.29		1.4	3784	992	2.36
T5	0.2	4794	723	1.85	T5	0.2	4747	741	1.90
	0.4	4672	767	1.96		0.4	4634	783	2.00
	0.6	4545	810	2.07		0.6	4527	824	2.11
	0.8	4443	852	2.18		0.8	4389	870	2.23
	1.0	4332	891	2.28		1.0	4266	906	2.32
	1.2	4215	933	2.39		1.2	4139	956	2.45
	1.4	4100	975	2.50		1.4	3996	1010	2.59
T6	0.2	4485	685	1.56	T6	0.2	4436	705	1.60
	0.4	4357	732	1.66		0.4	4307	751	1.71
	0.6	4225	778	1.77		0.6	4196	790	1.80
	0.8	4113	822	1.87		0.8	4040	847	1.93
	1.0	4004	866	2.0		1.0	3887	903	2.05
	1.2	3878	910	2.07		1.2	3782	940	2.1
	1.4	3760	952	2.16		1.4	3664	982	2.2
T7	0.2	4794	723	1.85	T7	0.2	4747	741	1.90
	0.4	4672	767	1.96		0.4	4634	783	2.00
	0.6	4545	810	2.07		0.6	4527	824	2.11
	0.8	4443	852	2.18		0.8	4389	870	2.23
	1.0	4332	891	2.28		1.0	4266	906	2.32
	1.2	4215	933	2.39		1.2	4139	956	2.45
	1.4	4100	975	2.50		1.4	3996	1010	2.59
T8	0.2	4485	685	1.56	T8	0.2	4436	705	1.60
	0.4	4357	732	1.66		0.4	4307	751	1.71
	0.6	4225	778	1.77		0.6	4196	790	1.80
	0.8	4113	822	1.87		0.8	4040	847	1.93
	1.0	4004	866	2.0		1.0	3887	903	2.05
	1.2	3878	910	2.07		1.2	3782	940	2.1
	1.4	3760	952	2.16		1.4	3664	982	2.2
T9	0.2	4595	699	1.66	T9	0.2	4546	717	1.71
	0.4	4470	744	1.77		0.4	4425	761	1.81
	0.6	4341	789	1.88		0.6	4314	803	1.91
	0.8	4234	833	1.98		0.8	4170	853	2.03
	1.0	4123	875	2.08		1.0	4039	909	2.16
	1.2	4002	918	2.18		1.2	3918	943	2.24
	1.4	3882	961	2.29		1.4	3784	992	2.36
T10	0.2	4794	723	1.85	T10	0.2	4747	741	1.90
	0.4	4672	767	1.96		0.4	4634	783	2.00
	0.6	4545	810	2.07		0.6	4527	824	2.11
	0.8	4443	852	2.18		0.8	4389	870	2.23
	1.0	4332	891	2.28		1.0	4266	906	2.32
	1.2	4215	933	2.39		1.2	4139	956	2.45
	1.4	4100	975	2.50		1.4	3996	1010	2.59

10.0 Ton Cooler • High Static Direct Drive

Models: DHC1203W, DHC1204W, DHC1207W

Down Flow				
SPEED TAP	ESP	CFM	RPM	BHP
T1	0.2	2217	420	0.32
	0.4	2010	507	0.38
	0.6	-	-	-
	0.8	-	-	-
	1.0	-	-	-
	1.2	-	-	-
	1.4	-	-	-
	1.6	-	-	-
	1.8	-	-	-
	2.0	-	-	-
T2	0.2	4204	653	1.32
	0.4	4062	702	1.42
	0.6	3926	748	1.51
	0.8	3806	796	1.61
	1.0	3694	842	1.70
	1.2	3584	891	1.80
	1.4	3484	938	1.90
	1.6	3082	1022	2.07
	1.8	2824	1083	2.19
	2.0	2658	1111	2.25
T3	0.2	3702	596	0.97
	0.4	3587	644	1.05
	0.6	3402	702	1.14
	0.8	3280	751	1.23
	1.0	3122	806	1.31
	1.2	-	-	-
	1.4	-	-	-
	1.6	-	-	-
	1.8	-	-	-
	2.0	-	-	-
T4	0.2	4851	729	1.91
	0.4	4729	773	2.02
	0.6	4600	817	2.14
	0.8	4498	858	2.25
	1.0	4390	897	2.35
	1.2	4272	939	2.46
	1.4	4161	979	2.56
	1.6	4075	1015	2.66
	1.8	3990	1049	2.75
	2.0	3874	1073	2.81
T5	0.2	-	-	-
	0.4	4903	793	2.21
	0.6	4772	838	2.33
	0.8	4671	875	2.44
	1.0	4564	913	2.54
	1.2	4448	954	2.66
	1.4	4348	990	2.76
	1.6	4233	1030	2.87
	1.8	4121	1070	2.98
	2.0	4030	1100	3.06
T6	0.2	4794	723	1.85
	0.4	4672	767	1.96
	0.6	4545	810	2.07
	0.8	4443	852	2.18
	1.0	4332	891	2.28
	1.2	4215	933	2.39
	1.4	4100	975	2.50
	1.6	3987	1011	2.59
	1.8	3894	1048	2.68
	2.0	3773	1075	2.75

Horizontal Flow				
SPEED TAP	ESP	CFM	RPM	BHP
T1	0.2	2246	427	0.32
	0.4	1986	518	0.39
	0.6	-	-	-
	0.8	-	-	-
	1.0	-	-	-
	1.2	-	-	-
	1.4	-	-	-
	1.6	-	-	-
	1.8	-	-	-
	2.0	-	-	-
T2	0.2	4141	671	1.36
	0.4	4026	717	1.45
	0.6	3890	764	1.55
	0.8	3745	820	1.66
	1.0	3581	878	1.78
	1.2	3438	936	1.89
	1.4	3270	980	1.98
	1.6	2965	1051	2.13
	1.8	2752	1096	2.22
	2.0	2646	1123	2.27
T3	0.2	3704	604	0.99
	0.4	3577	658	1.07
	0.6	3388	720	1.17
	0.8	3250	770	1.26
	1.0	3077	824	1.34
	1.2	-	-	-
	1.4	-	-	-
	1.6	-	-	-
	1.8	-	-	-
	2.0	-	-	-
T4	0.2	4807	748	1.96
	0.4	4688	791	2.07
	0.6	4585	829	2.17
	0.8	4435	878	2.30
	1.0	4325	936	2.45
	1.2	4203	964	2.52
	1.4	4054	1015	2.66
	1.6	3972	1042	2.73
	1.8	3862	1076	2.82
	2.0	3754	1105	2.89
T5	0.2	4987	771	2.15
	0.4	4865	814	2.27
	0.6	4771	846	2.36
	0.8	4604	906	2.52
	1.0	4448	959	2.67
	1.2	4356	990	2.76
	1.4	4235	1030	2.87
	1.6	4121	1066	2.97
	1.8	4022	1100	3.06
	2.0	3896	1134	3.16
T6	0.2	4747	741	1.90
	0.4	4634	783	2.00
	0.6	4527	824	2.11
	0.8	4389	870	2.23
	1.0	4266	926	2.37
	1.2	4139	956	2.45
	1.4	3996	1010	2.59
	1.6	3885	1042	2.67
	1.8	3762	1083	2.77
	2.0	3659	1112	2.85

10.0 Ton Cooler • High Static Direct Drive

Models: DHC1203W, DHC1204W, DHC1207W

Down Flow				
Speed Tap	**ESP**	**CFM**	**RPM**	**BHP**
T7	0.2	-	-	-
	0.4	4903	793	2.21
	0.6	4772	838	2.33
	0.8	4671	875	2.44
	1.0	4564	913	2.54
	1.2	4448	954	2.66
	1.4	4348	990	2.76
	1.6	4233	1030	2.87
	1.8	4121	1070	2.98
	2.0	4030	1100	3.06
T8	0.2	4794	723	1.85
	0.4	4672	767	1.96
	0.6	4545	810	2.07
	0.8	4443	852	2.18
	1.0	4332	891	2.28
	1.2	4215	933	2.39
	1.4	4100	975	2.50
	1.6	3987	1011	2.59
	1.8	3894	1048	2.68
	2.0	3773	1075	2.75
T9	0.2	4851	729	1.91
	0.4	4729	773	2.02
	0.6	4600	817	2.14
	0.8	4498	858	2.25
	1.0	4390	897	2.35
	1.2	4272	939	2.46
	1.4	4161	979	2.56
	1.6	4075	1015	2.66
	1.8	3990	1049	2.75
	2.0	3874	1073	2.81
T10	0.2	-	-	-
	0.4	4903	793	2.21
	0.6	4772	838	2.33
	0.8	4671	875	2.44
	1.0	4564	913	2.54
	1.2	4448	954	2.66
	1.4	4348	990	2.76
	1.6	4233	1030	2.87
	1.8	4121	1070	2.98
	2.0	4030	1100	3.06

Horizontal Flow				
Speed Tap	**ESP**	**CFM**	**RPM**	**BHP**
T7	0.2	4987	771	2.15
	0.4	4865	814	2.27
	0.6	4771	846	2.36
	0.8	4604	906	2.52
	1.0	4448	959	2.67
	1.2	4356	990	2.76
	1.4	4235	1030	2.87
	1.6	4121	1066	2.97
	1.8	4022	1100	3.06
	2.0	3896	1134	3.16
T8	0.2	4747	741	1.90
	0.4	4634	783	2.00
	0.6	4527	824	2.11
	0.8	4389	870	2.23
	1.0	4266	926	2.37
	1.2	4139	956	2.45
	1.4	3996	1010	2.59
	1.6	3885	1042	2.67
	1.8	3762	1083	2.77
	2.0	3659	1112	2.85
T9	0.2	4807	748	1.96
	0.4	4688	791	2.07
	0.6	4585	829	2.17
	0.8	4435	878	2.30
	1.0	4325	936	2.45
	1.2	4203	964	2.52
	1.4	4054	1015	2.66
	1.6	3972	1042	2.73
	1.8	3862	1076	2.82
	2.0	3754	1105	2.89
T10	0.2	4987	771	2.15
	0.4	4865	814	2.27
	0.6	4771	846	2.36
	0.8	4604	906	2.52
	1.0	4448	959	2.67
	1.2	4356	990	2.76
	1.4	4235	1030	2.87
	1.6	4121	1066	2.97
	1.8	4022	1100	3.06
	2.0	3896	1134	3.16

12.5 Ton Cooler • Standard Static Direct Drive

Models: DHC1503D, DHC1504D, DHC1507D

Down Flow				
Speed Tap	**ESP**	**CFM**	**RPM**	**BHP**
T1	0.2	2820	480	0.41
	0.4	-	-	-
	0.6	-	-	-
	0.8	-	-	-
T2	0.2	3608	530	0.66
	0.4	3304	619	0.77
	0.6	2987	710	0.89
	0.8	2559	808	1.01
T3	0.2	4415	602	1.15
	0.4	4241	672	1.29
	0.6	4013	758	1.45
	0.8	3811	825	1.58
T4	0.2	5156	650	1.62
	0.4	4977	713	1.78
	0.6	4785	780	1.94
	0.8	4580	856	2.13
T5	0.2	5420	667	1.84
	0.4	5273	730	2.01
	0.6	5092	804	2.21
	0.8	4863	865	2.38
T6	0.2	4415	602	1.15
	0.4	4241	672	1.29
	0.6	4013	758	1.45
	0.8	3811	825	1.58
T7	0.2	4914	644	1.47
	0.4	4736	705	1.61
	0.6	4509	766	1.75
	0.8	4284	846	1.93
T8	0.2	4415	602	1.15
	0.4	4241	672	1.29
	0.6	4013	758	1.45
	0.8	3811	825	1.58
T9	0.2	4623	623	1.30
	0.4	4457	699	1.46
	0.6	4242	772	1.62
	0.8	4029	837	1.75
T10	0.2	4914	644	1.47
	0.4	4736	705	1.61
	0.6	4509	766	1.75
	0.8	4284	846	1.93

Horizontal Flow				
Speed Tap	**ESP**	**CFM**	**RPM**	**BHP**
T1	0.2	2620	509	0.44
	0.4	-	-	-
	0.6	-	-	-
	0.8	-	-	-
T2	0.2	3256	567	0.71
	0.4	3076	640	0.80
	0.6	2960	682	0.85
	0.8	2616	766	0.96
T3	0.2	4179	689	1.32
	0.4	4042	731	1.40
	0.6	3895	782	1.50
	0.8	3754	822	1.58
T4	0.2	4840	747	1.86
	0.4	4688	805	2.00
	0.6	4591	841	2.09
	0.8	4461	885	2.20
T5	0.2	5098	774	2.13
	0.4	4936	831	2.29
	0.6	4835	867	2.39
	0.8	4725	908	2.50
T6	0.2	4179	689	1.32
	0.4	4042	731	1.40
	0.6	3895	782	1.50
	0.8	3754	822	1.58
T7	0.2	4614	734	1.68
	0.4	4501	781	1.79
	0.6	4389	820	1.87
	0.8	4262	865	1.98
T8	0.2	4179	689	1.32
	0.4	4042	731	1.40
	0.6	3895	782	1.50
	0.8	3754	822	1.58
T9	0.2	4418	715	1.50
	0.4	4294	755	1.58
	0.6	4170	800	1.68
	0.8	4026	841	1.76
T10	0.2	4614	734	1.68
	0.4	4501	781	1.79
	0.6	4389	820	1.87
	0.8	4262	865	1.98

12.5 Ton Cooler • Medium Static Direct Drive

Models: DHC1503L, DHC1504L, DHC1507L

Down Flow					Horizontal Flow				
Speed Tap	ESP	CFM	RPM	BHP	Speed Tap	ESP	CFM	RPM	BHP
T1	0.2	2820	480	0.41	T1	0.2	2620	509	0.44
	0.4	-	-	-		0.4	-	-	-
	0.6	-	-	-		0.6	-	-	-
	0.8	-	-	-		0.8	-	-	-
	1.0	-	-	-		1.0	-	-	-
	1.2	-	-	-		1.2	-	-	-
	1.4	-	-	-		1.4	-	-	-
T2	0.2	4298	596	1.09	T2	0.2	4044	674	1.23
	0.4	4122	663	1.21		0.4	3891	719	1.32
	0.6	3899	755	1.38		0.6	3736	773	1.41
	0.8	3711	820	1.50		0.8	3589	813	1.49
	1.0	3488	886	1.62		1.0	3448	850	1.56
	1.2	2970	1010	1.85		1.2	3310	891	1.63
	1.4	2808	1058	1.94		1.4	3162	937	1.71
T3	0.2	4415	602	1.15	T3	0.2	4179	689	1.32
	0.4	4241	672	1.29		0.4	4042	731	1.40
	0.6	4013	758	1.45		0.6	3895	782	1.50
	0.8	3811	825	1.58		0.8	3754	822	1.58
	1.0	-	-	-		1.0	-	-	-
	1.2	-	-	-		1.2	-	-	-
	1.4	-	-	-		1.4	-	-	-
T4	0.2	5156	650	1.62	T4	0.2	4840	747	1.86
	0.4	4977	713	1.78		0.4	4688	805	2.00
	0.6	4785	780	1.94		0.6	4591	841	2.09
	0.8	4580	856	2.13		0.8	4461	885	2.20
	1.0	4342	921	2.29		1.0	4342	925	2.30
	1.2	4113	981	2.44		1.2	4235	955	2.38
	1.4	3884	1037	2.58		1.4	4104	992	2.47
T5	0.2	5420	667	1.84	T5	0.2	5098	774	2.13
	0.4	5273	730	2.01		0.4	4936	831	2.29
	0.6	5092	804	2.21		0.6	4835	867	2.39
	0.8	4863	865	2.38		0.8	4725	908	2.50
	1.0	4651	936	2.58		1.0	4607	954	2.63
	1.2	4429	1001	2.76		1.2	4489	983	2.71
	1.4	4197	1020	2.81		1.4	4386	1016	2.80
T6	0.2	4914	644	1.47	T6	0.2	4614	734	1.68
	0.4	4736	705	1.61		0.4	4501	781	1.79
	0.6	4509	766	1.75		0.6	4389	820	1.87
	0.8	4284	846	1.93		0.8	4262	865	1.98
	1.0	4076	915	2.1		1.0	4139	903	2.06
	1.2	3843	970	2.22		1.2	4017	938	2.1
	1.4	-	-	-		1.4	3884	973	2.2
T7	0.2	5420	667	1.84	T7	0.2	5098	774	2.13
	0.4	5273	730	2.01		0.4	4936	831	2.29
	0.6	5092	804	2.21		0.6	4835	867	2.39
	0.8	4863	865	2.38		0.8	4725	908	2.50
	1.0	4651	936	2.58		1.0	4607	954	2.63
	1.2	4429	1001	2.76		1.2	4489	983	2.71
	1.4	4197	1020	2.81		1.4	4386	1016	2.80
T8	0.2	4914	644	1.47	T8	0.2	4614	734	1.68
	0.4	4736	705	1.61		0.4	4501	781	1.79
	0.6	4509	766	1.75		0.6	4389	820	1.87
	0.8	4284	846	1.93		0.8	4262	865	1.98
	1.0	4076	915	2.1		1.0	4139	903	2.06
	1.2	3843	970	2.22		1.2	4017	938	2.1
	1.4	-	-	-		1.4	3884	973	2.2
T9	0.2	5156	650	1.62	T9	0.2	4840	747	1.86
	0.4	4977	713	1.78		0.4	4688	805	2.00
	0.6	4785	780	1.94		0.6	4591	841	2.09
	0.8	4580	856	2.13		0.8	4461	885	2.20
	1.0	4342	921	2.29		1.0	4342	925	2.30
	1.2	4113	981	2.44		1.2	4235	955	2.38
	1.4	3884	1037	2.58		1.4	4104	992	2.47
T10	0.2	5420	667	1.84	T10	0.2	5098	774	2.13
	0.4	5273	730	2.01		0.4	4936	831	2.29
	0.6	5092	804	2.21		0.6	4835	867	2.39
	0.8	4863	865	2.38		0.8	4725	908	2.50
	1.0	4651	936	2.58		1.0	4607	954	2.63
	1.2	4429	1001	2.76		1.2	4489	983	2.71
	1.4	4197	1020	2.81		1.4	4386	1016	2.80

12.5 Ton Cooler • High Static Direct Drive

Models: DHC1503W, DHC1504W, DHC1507W

Down Flow				
Speed Tap	**ESP**	**CFM**	**RPM**	**BHP**
T1	0.2	2504	531	0.46
	0.4	-	-	-
	0.6	-	-	-
	0.8	-	-	-
	1.0	-	-	-
	1.2	-	-	-
	1.4	-	-	-
	1.6	-	-	-
	1.8	-	-	-
	2.0	-	-	-
T2	0.2	4164	759	1.56
	0.4	4107	794	1.64
	0.6	3980	840	1.73
	0.8	3882	882	1.82
	1.0	3738	931	1.92
	1.2	3438	1005	2.07
	1.4	3189	1069	2.20
	1.6	3026	1108	2.28
	1.8	2930	1129	2.33
	2.0	2843	1155	2.38
T3	0.2	4164	759	1.56
	0.4	4107	794	1.64
	0.6	3980	840	1.73
	0.8	3882	882	1.82
	1.0	-	-	-
	1.2	-	-	-
	1.4	-	-	-
	1.6	-	-	-
	1.8	-	-	-
	2.0	-	-	-
T4	0.2	5401	945	3.38
	0.4	5314	977	3.49
	0.6	5214	1011	3.61
	0.8	5142	1041	3.72
	1.0	5050	1073	3.83
	1.2	4952	1107	3.95
	1.4	4863	1139	4.07
	1.6	4742	1175	4.20
	1.8	4627	1210	4.32
	2.0	4511	1247	4.45
T5	0.2	5671	990	3.95
	0.4	5580	1019	4.06
	0.6	5495	1049	4.18
	0.8	5419	1077	4.30
	1.0	5345	1109	4.42
	1.2	5257	1139	4.54
	1.4	5162	1169	4.66
	1.6	5060	1205	4.81
	1.8	4938	1240	4.95
	2.0	4824	1273	5.08
T6	0.2	4891	868	2.42
	0.4	4809	902	2.51
	0.6	4718	939	2.62
	0.8	4628	972	2.71
	1.0	4531	1006	2.80
	1.2	4419	1047	2.92
	1.4	4304	1086	3.03
	1.6	4186	1123	3.13
	1.8	4064	1157	3.22
	2.0	-	-	-

Horizontal Flow				
Speed Tap	**ESP**	**CFM**	**RPM**	**BHP**
T1	0.2	2512	508	0.44
	0.4	-	-	-
	0.6	-	-	-
	0.8	-	-	-
	1.0	-	-	-
	1.2	-	-	-
	1.4	-	-	-
	1.6	-	-	-
	1.8	-	-	-
	2.0	-	-	-
T2	0.2	4186	706	1.45
	0.4	4079	753	1.55
	0.6	3981	796	1.64
	0.8	3854	847	1.74
	1.0	3727	897	1.85
	1.2	3627	938	1.93
	1.4	3517	982	2.02
	1.6	3262	1043	2.15
	1.8	2915	1118	2.30
	2.0	2812	1145	2.36
T3	0.2	4186	706	1.45
	0.4	4079	753	1.55
	0.6	3981	796	1.64
	0.8	3854	847	1.74
	1.0	-	-	-
	1.2	-	-	-
	1.4	-	-	-
	1.6	-	-	-
	1.8	-	-	-
	2.0	-	-	-
T4	0.2	5489	873	3.12
	0.4	5410	904	3.23
	0.6	5325	937	3.35
	0.8	5235	970	3.46
	1.0	5136	1004	3.59
	1.2	5038	1043	3.73
	1.4	4936	1083	3.87
	1.6	4819	1123	4.01
	1.8	4699	1166	4.16
	2.0	4595	1196	4.27
T5	0.2	5770	911	3.63
	0.4	5685	940	3.75
	0.6	5605	971	3.87
	0.8	5518	1001	3.99
	1.0	5425	1036	4.13
	1.2	5336	1072	4.27
	1.4	5235	1108	4.42
	1.6	5113	1151	4.59
	1.8	4977	1194	4.76
	2.0	4871	1221	4.87
T6	0.2	4970	803	2.24
	0.4	4889	840	2.34
	0.6	4799	877	2.44
	0.8	4702	921	2.57
	1.0	4614	953	2.65
	1.2	4492	1001	2.79
	1.4	4364	1053	2.93
	1.6	4259	1081	3.01
	1.8	4129	1122	3.13
	2.0	4011	1156	3.22

12.5 Ton Cooler • High Static Direct Drive

Models: DHC1503W, DHC1504W, DHC1507W

Down Flow				
Speed Tap	**ESP**	**CFM**	**RPM**	**BHP**
T7	0.2	5401	945	3.38
	0.4	5314	977	3.49
	0.6	5214	1011	3.61
	0.8	5142	1041	3.72
	1.0	5050	1073	3.83
	1.2	4952	1107	3.95
	1.4	4863	1139	4.07
	1.6	4742	1175	4.20
	1.8	4627	1210	4.32
	2.0	4511	1247	4.45
T8	0.2	4891	868	2.42
	0.4	4809	902	2.51
	0.6	4718	939	2.62
	0.8	4628	972	2.71
	1.0	4531	1006	2.80
	1.2	4419	1047	2.92
	1.4	4304	1086	3.03
	1.6	4186	1123	3.13
	1.8	4064	1157	3.22
	2.0	-	-	-
T9	0.2	5197	915	3.05
	0.4	5109	947	3.16
	0.6	5007	980	3.27
	0.8	4933	1014	3.38
	1.0	4845	1047	3.49
	1.2	4737	1083	3.61
	1.4	4638	1118	3.73
	1.6	4520	1153	3.84
	1.8	4398	1191	3.97
	2.0	4285	1222	4.07
T10	0.2	5401	945	3.38
	0.4	5314	977	3.49
	0.6	5214	1011	3.61
	0.8	5142	1041	3.72
	1.0	5050	1073	3.83
	1.2	4952	1107	3.95
	1.4	4863	1139	4.07
	1.6	4742	1175	4.20
	1.8	4627	1210	4.32
	2.0	4511	1247	4.45

Horizontal Flow				
Speed Tap	**ESP**	**CFM**	**RPM**	**BHP**
T7	0.2	5489	873	3.12
	0.4	5410	904	3.23
	0.6	5325	937	3.35
	0.8	5235	970	3.46
	1.0	5136	1004	3.59
	1.2	5038	1043	3.73
	1.4	4936	1083	3.87
	1.6	4819	1123	4.01
	1.8	4699	1166	4.16
	2.0	4595	1196	4.27
T8	0.2	4970	803	2.24
	0.4	4889	840	2.34
	0.6	4799	877	2.44
	0.8	4702	921	2.57
	1.0	4614	953	2.65
	1.2	4492	1001	2.79
	1.4	4364	1053	2.93
	1.6	4259	1081	3.01
	1.8	4129	1122	3.13
	2.0	4011	1156	3.22
T9	0.2	5282	846	2.82
	0.4	5199	847	2.82
	0.6	5113	870	2.90
	0.8	5017	915	3.05
	1.0	4913	982	3.27
	1.2	4817	1026	3.42
	1.4	4716	1067	3.56
	1.6	4598	1108	3.69
	1.8	4479	1147	3.82
	2.0	4360	1179	3.93
T10	0.2	5489	873	3.12
	0.4	5410	904	3.23
	0.6	5325	937	3.35
	0.8	5235	970	3.46
	1.0	5136	1004	3.59
	1.2	5038	1043	3.73
	1.4	4936	1083	3.87
	1.6	4819	1123	4.01
	1.8	4699	1166	4.16
	2.0	4595	1196	4.27

7.5 Ton Models: DHC0903D, DHC0904D & DHC0907D with DDC CONTROLS • Standard Static to 1.7 HP (0.2 ~ 0.8 Esp) • Down Flow

CFM	0.2			0.4			0.6			0.8			1.0		
	RPM	DDC %	BHP	RPM	DDC %	BHP	RPM	DDC %	BHP	RPM	DDC %	BHP	RPM	DDC %	BHP
1400										782	25	0.49	-	-	-
1600				647	20	0.37	717	25	0.43	801	33	0.57	-	-	-
1800	555	20	0.33	671	28	0.44	740	33	0.50	820	40	0.65	-	-	-
2000	587	28	0.40	696	35	0.51	763	40	0.57	839	45	0.75	-	-	-
2200	619	38	0.48	720	43	0.60	786	48	0.66	858	53	0.87	-	-	-
2400	651	45	0.57	745	51	0.71	809	56	0.76	877	61	1.00	-	-	-
2600	683	53	0.69	769	58	0.83	832	63	0.87	896	68	1.15	-	-	-
2800	715	61	0.82	794	66	0.98	855	71	1.00	915	76	1.32	-	-	-
3000	747	68	0.99	818	73	1.14	878	79	1.15	934	84	1.52	-	-	-
3200	779	79	1.18	843	81	1.34	901	86	1.33	953	89	1.74	-	-	-
3400	810	86	1.41	867	89	1.58	924	90	1.53				-	-	-
3600	842	90	1.69										-	-	-

Shaded area indicates air flow below 2250 SCFM (300 SCFM/ton) that is not recommended for High Stage cooling or heating.
Valid motor operating range for DDC% setting is 20 - 90.

HORIZONTAL FLOW

CFM	0.2			0.4			0.6			0.8			1.0		
	RPM	DDC %	BHP	RPM	DDC %	BHP	RPM	DDC %	BHP	RPM	DDC %	BHP	RPM	DDC %	BHP
1400	409	33	0.23	518	20	0.32	597	20	0.41	720	30	0.59	-	-	-
1600	440	38	0.27	542	28	0.37	619	25	0.48	733	38	0.67	-	-	-
1800	471	45	0.33	567	33	0.44	641	35	0.55	745	45	0.75	-	-	-
2000	502	51	0.39	591	40	0.51	664	43	0.63	758	51	0.85	-	-	-
2200	533	58	0.47	616	48	0.60	686	51	0.72	771	58	0.96	-	-	-
2400	564	63	0.56	640	56	0.71	708	58	0.83	784	66	1.08	-	-	-
2600	595	68	0.67	665	63	0.83	730	66	0.96	797	71	1.22	-	-	-
2800	626	76	0.81	690	68	0.97	752	73	1.10	809	79	1.37	-	-	-
3000	657	81	0.97	714	76	1.14	774	81	1.27	822	86	1.55	-	-	-
3200	688	89	1.16	739	84	1.34	796	89	1.46	835	90	1.75	-	-	-
3400	718	90	1.38	763	90	1.57							-	-	-
3600													-	-	-

Shaded area indicates air flow below 2250 SCFM (300 SCFM/ton) that is not recommended for High Stage cooling or heating.
Valid motor operating range for DDC% setting is 20 - 90.

7.5 Ton Models: DHC0903L, DHC0904L & DHC0907L with DDC CONTROLS • Medium Static to 2.4 HP (0.2 ~ 1.4 Esp) • Down Flow

CFM	0.2			0.4			0.6			0.8			1.0		
	RPM	DDC %	BHP	RPM	DDC %	BHP	RPM	DDC %	BHP	RPM	DDC %	BHP	RPM	DDC %	BHP
1400	486	7	0.24	594	13	0.31	691	17	0.38	782	22	0.49	821	13	0.58
1600	519	13	0.28	622	18	0.36	715	23	0.43	802	27	0.57	843	20	0.66
1800	553	18	0.34	651	23	0.42	740	28	0.50	822	32	0.65	865	27	0.74
2000	586	25	0.41	679	30	0.50	764	33	0.57	843	37	0.75	887	33	0.84
2200	619	30	0.49	708	35	0.58	788	38	0.66	863	43	0.86	909	40	0.94
2400	652	37	0.58	736	40	0.69	813	45	0.76	883	48	0.99	931	45	1.06
2600	685	42	0.70	764	46	0.80	837	50	0.87	903	53	1.14	953	51	1.20
2800	719	48	0.84	793	51	0.94	861	55	1.00	923	58	1.31	975	58	1.35
3000	752	53	1.00	821	58	1.11	886	60	1.15	943	63	1.51	997	65	1.52
3200	785	60	1.20	849	63	1.30	910	66	1.33	964	68	1.73	1019	71	1.72
3400	818	65	1.43	878	68	1.53	935	71	1.53	984	73	1.99	1041	78	1.94
3600	852	71	1.72	906	75	1.79	959	76	1.76	1004	78	2.29	1063	85	2.18
3800	885	76	2.05	935	80	2.10	983	81	2.02						

CFM	1.2			1.4			1.6			1.8			2.0		
	RPM	DDC %	BHP	RPM	DDC %	BHP	RPM	DDC %	BHP	RPM	DDC %	BHP	RPM	DDC %	BHP
1400	919	25	0.76	1040	33	1.00	-	-	-	-	-	-	-	-	-
1600	936	30	0.84	1048	38	1.08	-	-	-	-	-	-	-	-	-
1800	952	35	0.93	1056	43	1.17	-	-	-	-	-	-	-	-	-
2000	969	42	1.02	1064	48	1.27	-	-	-	-	-	-	-	-	-
2200	986	46	1.13	1071	53	1.38	-	-	-	-	-	-	-	-	-
2400	1002	51	1.25	1079	58	1.49	-	-	-	-	-	-	-	-	-
2600	1019	58	1.38	1087	63	1.62	-	-	-	-	-	-	-	-	-
2800	1035	63	1.53	1095	68	1.75	-	-	-	-	-	-	-	-	-
3000	1052	68	1.69	1102	73	1.90	-	-	-	-	-	-	-	-	-
3200	1068	75	1.86	1110	78	2.05	-	-	-	-	-	-	-	-	-
3400	1085	80	2.06	1118	81	2.22	-	-	-	-	-	-	-	-	-
3600	1101	86	2.28	1126	86	2.41	-	-	-	-	-	-	-	-	-
3800							-	-	-	-	-	-	-	-	-

Shaded area indicates air flow below 2250 SCFM (300 SCFM/ton) that is not recommended for High Stage cooling or heating.
Valid motor operating range for DDC% setting is 20 - 90.

HORIZONTAL FLOW

CFM	0.2			0.4			0.6			0.8			1.0		
	RPM	DDC %	BHP	RPM	DDC %	BHP	RPM	DDC %	BHP	RPM	DDC %	BHP	RPM	DDC %	BHP
1400	421	13	0.20	507	18	0.31	560	13	0.39	652	20	0.53	736	27	0.61
1600	450	18	0.24	535	23	0.36	587	20	0.45	675	27	0.60	755	32	0.67
1800	478	23	0.28	562	28	0.42	615	27	0.50	697	32	0.67	775	37	0.74
2000	506	28	0.33	590	33	0.50	643	32	0.57	720	37	0.76	794	42	0.82
2200	534	35	0.39	618	38	0.58	670	38	0.64	742	43	0.85	813	46	0.90
2400	563	40	0.46	645	43	0.69	698	43	0.72	765	48	0.96	833	53	1.00
2600	591	45	0.53	673	50	0.81	725	50	0.81	788	53	1.09	852	58	1.10
2800	619	50	0.63	701	55	0.94	753	55	0.91	810	58	1.22	872	63	1.22
3000	647	55	0.74	728	60	1.11	780	61	1.03	833	65	1.38	891	68	1.35
3200	675	61	0.86	756	65	1.30	808	66	1.16	856	70	1.56	910	73	1.49
3400	704	66	1.01	783	70	1.53	836	73	1.31	878	75	1.76	930	80	1.65
3600	732	71	1.19	811	75	1.79	863	80	1.48	901	81	1.98	949	85	1.82
3800	760	76	1.40	839	80	2.10	891	85	1.67	923	86	2.23	968	90	2.01
CFM	1.2			1.4			1.6			1.8			2.0		
	RPM	DDC %	BHP	RPM	DDC %	BHP	RPM	DDC %	BHP	RPM	DDC %	BHP	RPM	DDC %	BHP
1400	862	38	0.92	957	45	1.09	-	-	-	-	-	-	-	-	-
1600	872	42	0.99	960	48	1.15	-	-	-	-	-	-	-	-	-
1800	882	46	1.08	964	51	1.22	-	-	-	-	-	-	-	-	-
2000	892	50	1.17	967	55	1.30	-	-	-	-	-	-	-	-	-
2200	902	55	1.26	971	58	1.38	-	-	-	-	-	-	-	-	-
2400	911	58	1.37	974	63	1.46	-	-	-	-	-	-	-	-	-
2600	921	63	1.48	978	66	1.56	-	-	-	-	-	-	-	-	-
2800	931	66	1.60	981	70	1.65	-	-	-	-	-	-	-	-	-
3000	941	71	1.74	985	73	1.75	-	-	-	-	-	-	-	-	-
3200	951	75	1.88	988	78	1.86	-	-	-	-	-	-	-	-	-
3400	961	80	2.04	992	81	1.98	-	-	-	-	-	-	-	-	-
3600	971	85	2.21	995	85	2.10	-	-	-	-	-	-	-	-	-
3800	980	88	2.39	999	88	2.23	-	-	-	-	-	-	-	-	-

Shaded area indicates air flow below 2250 SCFM (300 SCFM/ton) that is not recommended for High Stage cooling or heating.
Valid motor operating range for DDC% setting is 20 - 90.

7.5 Ton Models: DHC0903W,DHC0904W & DHC0907W with DDC CONTROLS • High Static to 3.5 HP (0.2 ~ 2.0 Esp) • Down Flow

CFM	0.2			0.4			0.6			0.8			1.0		
	RPM	DDC %	BHP	RPM	DDC %	BHP	RPM	DDC %	BHP	RPM	DDC %	BHP	RPM	DDC %	BHP
1800	543	23	0.29	651	25	0.42	743	28	0.53	820	29	0.67	863	29	0.73
2000	580	25	0.35	680	29	0.49	766	32	0.61	842	33	0.77	885	33	0.82
2200	616	29	0.42	708	32	0.58	789	34	0.71	863	37	0.88	907	37	0.93
2400	652	33	0.50	736	36	0.68	812	38	0.81	884	39	1.01	929	41	1.05
2600	688	37	0.60	764	38	0.80	835	41	0.93	906	43	1.17	951	45	1.18
2800	725	39	0.71	792	42	0.94	858	43	1.07	927	46	1.34	974	47	1.33
3000	761	43	0.86	820	45	1.10	881	47	1.24	948	50	1.54	996	51	1.50
3200	797	47	1.02	848	49	1.29	904	50	1.42	970	54	1.77	1018	55	1.69
3400	833	51	1.23	876	52	1.52	927	54	1.63	991	56	2.04	1040	59	1.91
3600	870	55	1.47	904	55	1.78	950	56	1.88	1012	60	2.35	1062	61	2.15
3800	906	58	1.76	933	59	2.09	974	60	2.16	1033	63	2.70	1084	65	2.43
CFM	1.2			1.4			1.6			1.8			2.0		
	RPM	DDC %	BHP	RPM	DDC %	BHP	RPM	DDC %	BHP	RPM	DDC %	BHP	RPM	DDC %	BHP
1800	948	34	0.90	1059	36	1.10	1137	39	1.48	1180	42	1.59	1217	45	1.54
2000	965	38	1.00	1068	39	1.19	1141	43	1.60	1185	45	1.72	1232	47	1.67
2200	981	41	1.10	1077	42	1.29	1145	46	1.73	1190	47	1.87	1246	50	1.81
2400	998	45	1.22	1087	45	1.40	1149	49	1.88	1195	50	2.02	1260	52	1.96
2600	1014	47	1.35	1096	49	1.52	1154	51	2.03	1200	52	2.19	1274	55	2.12
2800	1031	50	1.49	1105	51	1.64	1158	54	2.20	1205	56	2.37	1288	58	2.30
3000	1047	54	1.64	1115	55	1.78	1162	56	2.39	1210	59	2.57	1302	60	2.49
3200	1064	56	1.82	1124	58	1.93	1166	60	2.59	1215	61	2.78	1316	63	2.69
3400	1080	60	2.01	1133	61	2.09	1171	63	2.80	1220	64	3.02	1331	65	2.92
3600	1097	63	2.22	1143	64	2.26	1175	65	3.03	1225	67	3.27	1345	68	3.16
3800	1113	67	2.45	1152	67	2.45	1179	68	3.29	1230	71	3.50	1359	71	3.43

Shaded area indicates air flow below 2250 SCFM (300 SCFM/ton) that is not recommended for High Stage cooling or heating.
Valid motor operating range for DDC% setting is 20 - 90.

HORIZONTAL FLOW

CFM	0.2			0.4			0.6			0.8			1.0		
	RPM	DDC %	BHP	RPM	DDC %	BHP	RPM	DDC %	BHP	RPM	DDC %	BHP	RPM	DDC %	BHP
1800	466	23	0.29	567	29	0.42	632	32	0.51	673	30	0.65	762	33	0.75
2000	499	25	0.35	595	32	0.49	657	36	0.58	700	33	0.75	784	37	0.85
2200	532	29	0.42	622	34	0.58	681	38	0.65	727	37	0.87	806	39	0.96
2400	565	32	0.50	650	38	0.68	706	41	0.73	754	41	1.00	829	43	1.08
2600	598	36	0.60	677	41	0.80	731	43	0.82	781	43	1.15	851	46	1.21
2800	630	38	0.71	705	43	0.93	756	46	0.93	809	47	1.32	873	50	1.37
3000	663	42	0.85	732	47	1.10	780	49	1.05	836	51	1.52	895	52	1.54
3200	696	46	1.02	760	50	1.29	805	51	1.18	863	54	1.74	918	56	1.74
3400	729	49	1.22	788	52	1.51	830	55	1.33	890	58	2.01	940	59	1.96
3600	762	52	1.47	815	55	1.77	854	58	1.50	917	61	2.31	962	63	2.21
3800	795	55	1.75	843	59	2.08	879	60	1.69	945	64	2.65	984	65	2.50
CFM	1.2			1.4			1.6			1.8			2.0		
	RPM	DDC %	BHP	RPM	DDC %	BHP	RPM	DDC %	BHP	RPM	DDC %	BHP	RPM	DDC %	BHP
1800	843	36	0.83	968	41	1.27	1025	43	1.51	1066	45	1.63	1112	46	1.79
2000	860	39	0.92	974	43	1.37	1029	46	1.63	1070	47	1.76	1118	50	1.94
2200	877	42	1.02	980	46	1.49	1033	49	1.77	1074	50	1.91	1124	52	2.10
2400	895	46	1.12	986	49	1.61	1037	51	1.92	1079	52	2.07	1130	55	2.27
2600	912	49	1.24	992	51	1.74	1041	54	2.08	1083	55	2.24	1135	58	2.46
2800	929	51	1.37	998	54	1.89	1045	56	2.25	1087	58	2.43	1141	60	2.67
3000	947	55	1.52	1004	56	2.05	1048	59	2.44	1092	60	2.63	1147	63	2.89
3200	964	58	1.67	1009	60	2.22	1052	61	2.64	1096	63	2.85	1153	65	3.13
3400	981	61	1.85	1015	63	2.40	1056	64	2.86	1100	65	3.09	1159	68	3.39
3600	999	64	2.05	1021	65	2.60	1060	67	3.10	1105	68	3.35			
3800	1016	67	2.26	1027	68	2.82	1064	69	3.36						

Shaded area indicates air flow below 2250 SCFM (300 SCFM/ton) that is not recommended for High Stage cooling or heating.
Valid motor operating range for DDC% setting is 20 - 90.

8.5 Ton Models: DHC1023D,DHC1024D & DHC1027D with DDC CONTROL • Standard Static to 2.4 HP (0.2 ~ 0.8 Esp) • Down Flow

CFM	0.2			0.4			0.6			0.8			1.0		
	RPM	DDC %	BHP	RPM	DDC %	BHP	RPM	DDC %	BHP	RPM	DDC %	BHP	RPM	DDC %	BHP
1600							607	22	0.48	801	28	0.61	-	-	-
1800	424	18	0.37	515	23	0.46	625	27	0.54	820	33	0.69	-	-	-
2000	452	23	0.44	539	30	0.54	642	33	0.61	839	37	0.77	-	-	-
2200	480	30	0.53	563	35	0.63	659	38	0.68	858	42	0.87	-	-	-
2400	507	35	0.63	588	40	0.74	677	45	0.77	877	46	0.98	-	-	-
2600	535	42	0.76	612	46	0.87	694	50	0.87	896	51	1.11	-	-	-
2800	563	46	0.90	636	51	1.02	711	56	0.98	915	56	1.25	-	-	-
3000	590	53	1.08	660	56	1.20	729	61	1.10	934	61	1.41	-	-	-
3200	618	58	1.30	684	63	1.41	746	66	1.24	953	65	1.59	-	-	-
3400	646	63	1.55	708	68	1.65	763	73	1.40	972	70	1.79	-	-	-
3600	673	70	1.86	733	73	1.94	781	78	1.58	991	75	2.02	-	-	-
3800	701	75	2.23	757	80	2.28	798	85	1.78	1010	80	2.28	-	-	-

Shaded area indicates air flow below 2550 SCFM (300 SCFM/ton) that is not recommended for High Stage cooling or heating.
Valid motor operating range for DDC% setting is 20 - 90.

HORIZONTAL FLOW

CFM	0.2			0.4			0.6			0.8			1.0		
	RPM	DDC %	BHP	RPM	DDC %	BHP	RPM	DDC %	BHP	RPM	DDC %	BHP	RPM	DDC %	BHP
1600										611	22	0.49	-	-	-
1800				496	22	0.34	581	23	0.47	632	27	0.56	-	-	-
2000	435	22	0.32	521	27	0.39	603	30	0.53	654	33	0.63	-	-	-
2200	464	28	0.37	546	33	0.45	626	35	0.59	675	38	0.71	-	-	-
2400	494	33	0.43	571	38	0.52	648	42	0.67	696	43	0.80	-	-	-
2600	523	40	0.51	596	45	0.60	671	46	0.75	718	50	0.90	-	-	-
2800	552	45	0.60	621	50	0.69	693	53	0.85	739	55	1.01	-	-	-
3000	581	51	0.70	646	55	0.79	715	60	0.96	760	61	1.14	-	-	-
3200	611	58	0.82	671	61	0.91	738	65	1.08	782	66	1.29	-	-	-
3400	640	63	0.97	695	66	1.05	760	71	1.22	803	71	1.45	-	-	-
3600	669	70	1.13	720	73	1.20	782	76	1.37	824	78	1.64	-	-	-
3800	699	75	1.33	745	78	1.39	805	83	1.55	846	83	1.85	-	-	-

Shaded area indicates air flow below 2550 SCFM (300 SCFM/ton) that is not recommended for High Stage cooling or heating.
Valid motor operating range for DDC% setting is 20 - 90.

8.5 Ton Models: DHC1023L,DHC1024L & DHC1027L with DDC CONTROL • Medium Static to 2.4 HP (0.2 ~ 1.4 Esp) • Down Flow

CFM	0.2			0.4			0.6			0.8			1.0		
	RPM	DDC %	BHP	RPM	DDC %	BHP	RPM	DDC %	BHP	RPM	DDC %	BHP	RPM	DDC %	BHP
1600				491	20	0.37	586	25	0.48	642	27	0.66	736	33	0.81
1800	423	20	0.30	515	25	0.41	608	30	0.54	663	32	0.73	754	38	0.87
2000	451	25	0.35	540	30	0.47	629	37	0.61	684	38	0.80	771	45	0.95
2200	479	30	0.41	564	37	0.53	650	42	0.69	706	43	0.89	789	50	1.03
2400	507	37	0.48	589	42	0.59	672	46	0.78	727	48	0.98	806	55	1.11
2600	535	42	0.56	613	46	0.67	693	51	0.88	749	55	1.09	823	61	1.20
2800	563	46	0.66	638	51	0.75	714	56	0.99	770	60	1.20	841	66	1.30
3000	591	53	0.77	662	56	0.85	736	63	1.11	791	66	1.33	858	71	1.41
3200	619	58	0.90	686	63	0.96	757	68	1.25	813	71	1.47	875	76	1.53
3400	647	63	1.06	711	68	1.08	778	73	1.41	834	76	1.62	893	83	1.66
3600	675	70	1.25	735	73	1.22	800	78	1.59	855	83	1.79	910	88	1.80
3800	703	75	1.46	760	78	1.37	821	83	1.80	877	88	1.98	928	90	1.95
CFM	1.2			1.4			1.6			1.8			2.0		
	RPM	DDC %	BHP	RPM	DDC %	BHP	RPM	DDC %	BHP	RPM	DDC %	BHP	RPM	DDC %	BHP
1600	814	42	1.06	858	45	1.07	-	-	-	-	-	-	-	-	-
1800	828	46	1.15	873	50	1.15	-	-	-	-	-	-	-	-	-
2000	842	51	1.24	888	55	1.25	-	-	-	-	-	-	-	-	-
2200	856	56	1.35	903	60	1.35	-	-	-	-	-	-	-	-	-
2400	871	61	1.46	917	65	1.47	-	-	-	-	-	-	-	-	-
2600	885	66	1.58	932	71	1.59	-	-	-	-	-	-	-	-	-
2800	899	71	1.71	947	76	1.72	-	-	-	-	-	-	-	-	-
3000	913	76	1.86	962	81	1.87	-	-	-	-	-	-	-	-	-
3200	927	81	2.01	976	86	2.02	-	-	-	-	-	-	-	-	-
3400	941	86	2.18	991	90	2.19	-	-	-	-	-	-	-	-	-
3600	955	90	2.36				-	-	-	-	-	-	-	-	-
3800							-	-	-	-	-	-	-	-	-

Shaded area indicates air flow below 2550 SCFM (300 SCFM/ton) that is not recommended for High Stage cooling or heating.
Valid motor operating range for DDC% setting is 20 - 90.

HORIZONTAL FLOW

CFM	0.2			0.4			0.6			0.8			1.0		
	RPM	DDC %	BHP	RPM	DDC %	BHP	RPM	DDC %	BHP	RPM	DDC %	BHP	RPM	DDC %	BHP
1600							576	23	0.48	624	22	0.62	717	27	0.81
1800	406	18	0.26	497	22	0.36	596	28	0.54	643	27	0.68	732	32	0.87
2000	435	23	0.30	522	28	0.41	616	33	0.61	663	33	0.76	748	37	0.95
2200	464	28	0.35	547	33	0.46	636	38	0.69	683	38	0.84	763	42	1.03
2400	493	35	0.42	572	38	0.52	656	43	0.78	703	45	0.92	778	48	1.11
2600	521	40	0.49	596	45	0.59	676	50	0.88	723	50	1.02	794	54	1.20
2800	550	46	0.57	621	50	0.66	696	55	0.99	743	55	1.13	809	59	1.30
3000	579	51	0.67	646	56	0.75	716	60	1.11	762	61	1.25	824	65	1.41
3200	608	58	0.79	671	61	0.84	736	65	1.25	782	66	1.38	840	70	1.53
3400	637	63	0.92	696	66	0.95	756	70	1.41	802	73	1.52	855	75	1.66
3600	666	70	1.08	720	73	1.07	776	76	1.59	822	78	1.68	870	80	1.80
3800	695	75	1.27	745	78	1.21	796	81	1.80	842	83	1.86	885	85	1.95

CFM	1.2			1.4			1.6			1.8			2.0		
	RPM	DDC %	BHP	RPM	DDC %	BHP	RPM	DDC %	BHP	RPM	DDC %	BHP	RPM	DDC %	BHP
1600	777	32	0.86	827	35	0.96	-	-	-	-	-	-	-	-	-
1800	790	37	0.93	839	40	1.04	-	-	-	-	-	-	-	-	-
2000	804	42	1.01	852	45	1.13	-	-	-	-	-	-	-	-	-
2200	818	46	1.09	865	50	1.22	-	-	-	-	-	-	-	-	-
2400	831	51	1.18	878	55	1.32	-	-	-	-	-	-	-	-	-
2600	845	58	1.28	890	60	1.43	-	-	-	-	-	-	-	-	-
2800	858	63	1.39	903	65	1.55	-	-	-	-	-	-	-	-	-
3000	872	68	1.51	916	71	1.68	-	-	-	-	-	-	-	-	-
3200	885	73	1.63	929	76	1.82	-	-	-	-	-	-	-	-	-
3400	899	78	1.77	941	81	1.97	-	-	-	-	-	-	-	-	-
3600	913	83	1.91	954	86	2.14	-	-	-	-	-	-	-	-	-
3800	969	88	2.07				-	-	-	-	-	-	-	-	-

Shaded area indicates air flow below 2550 SCFM (300 SCFM/ton) that is not recommended for High Stage cooling or heating.
Valid motor operating range for DDC% setting is 20 - 90.

8.5 Ton Models: DHC1023W, DHC1024W & DHC1027W with DDC CONTROL • High Static to 3.5 HP (0.2 ~ 2.0 Esp) • Down Flow

CFM	0.2			0.4			0.6			0.8			1.0		
	RPM	DDC %	BHP	RPM	DDC %	BHP	RPM	DDC %	BHP	RPM	DDC %	BHP	RPM	DDC %	BHP
1600							586	24	0.43	633	23	0.61	713	21	0.80
1800				509	24	0.37	608	28	0.48	656	26	0.68	734	26	0.89
2000	450	24	0.31	535	28	0.43	630	33	0.54	679	32	0.77	755	33	0.98
2200	478	28	0.35	560	32	0.49	652	37	0.61	702	37	0.87	776	38	1.08
2400	506	33	0.41	586	37	0.56	674	41	0.69	726	42	0.98	796	43	1.20
2600	534	37	0.47	612	41	0.65	695	46	0.78	749	47	1.10	817	49	1.32
2800	562	42	0.54	637	46	0.75	717	50	0.88	772	51	1.24	838	54	1.46
3000	590	46	0.62	663	50	0.86	739	54	0.99	796	56	1.40	859	59	1.62
3200	617	50	0.71	689	54	0.99	761	59	1.11	819	61	1.58	880	65	1.79
3400	645	55	0.82	714	59	1.14	783	63	1.26	842	67	1.78	901	71	1.98
3600	673	59	0.94	740	63	1.31	805	68	1.42	866	71	2.01	921	76	2.18
3800	701	64	1.08	766	67	1.50	827	72	1.60	889	76	2.27	942	81	2.41
4000	729	68	1.24	791	72	1.73	849	76	1.80	912	81	2.55	963	86	2.67
4200	757	73	1.43	817	76	1.99	871	81	2.03	935	86	2.88	984	90	2.95
CFM	1.2			1.4			1.6			1.8			2.0		
	RPM	DDC %	BHP	RPM	DDC %	BHP	RPM	DDC %	BHP	RPM	DDC %	BHP	RPM	DDC %	BHP
1600	784	28	0.93	851	33	1.13	906	37	1.32	966	43	1.31	999	47	1.43
1800	803	33	1.03	869	38	1.25	923	43	1.46	981	49	1.42	1015	52	1.55
2000	822	38	1.14	887	43	1.38	939	49	1.61	997	54	1.53	1031	58	1.67
2200	841	43	1.26	904	49	1.52	956	54	1.78	1012	59	1.66	1048	63	1.81
2400	860	49	1.39	922	54	1.68	973	59	1.97	1028	64	1.80	1064	69	1.97
2600	880	54	1.54	939	59	1.86	990	64	2.17	1043	69	1.95	1080	74	2.13
2800	899	59	1.70	957	64	2.06	1006	69	2.40	1058	74	2.11	1097	80	2.31
3000	918	64	1.88	974	69	2.27	1023	74	2.65	1074	80	2.29	1113	85	2.50
3200	937	71	2.07	992	74	2.51	1040	80	2.93	1089	85	2.48	1130	90	2.71
3400	956	76	2.29	1010	80	2.77	1056	85	3.24	1105	90	2.68			
3600	975	81	2.53	1027	86	3.07	1073	90	3.58						
3800	994	86	2.80	1045	90	3.39									
4000	1013	90	3.09												
4200															

Shaded area indicates air flow below 2550 SCFM (300 SCFM/ton) that is not recommended for High Stage cooling or heating.
Valid motor operating range for DDC% setting is 20 - 90.

HORIZONTAL FLOW

CFM	0.2			0.4			0.6			0.8			1.0		
	RPM	DDC %	BHP	RPM	DDC %	BHP	RPM	DDC %	BHP	RPM	DDC %	BHP	RPM	DDC %	BHP
1600													645	20	0.55
1800				472	20	0.37	579	25	0.46	571	20	0.53	670	25	0.63
2000	414	21	0.30	502	25	0.44	604	29	0.53	602	25	0.61	695	30	0.71
2200	448	25	0.35	533	29	0.51	629	34	0.61	633	30	0.70	721	36	0.80
2400	481	30	0.41	563	34	0.60	654	39	0.70	663	36	0.81	746	41	0.90
2600	515	36	0.49	593	39	0.71	679	43	0.81	694	41	0.93	771	46	1.01
2800	549	41	0.57	624	45	0.83	705	49	0.93	725	46	1.07	797	51	1.14
3000	582	46	0.67	654	49	0.97	730	52	1.07	756	52	1.23	822	55	1.29
3200	616	51	0.79	684	54	1.14	755	58	1.23	786	58	1.42	848	60	1.45
3400	650	55	0.92	715	59	1.34	780	61	1.41	817	63	1.63	873	65	1.63
3600	683	60	1.08	745	64	1.57	805	67	1.63	848	68	1.88	898	71	1.84
3800	717	65	1.27	775	68	1.85	830	71	1.87	878	73	2.16	924	76	2.08
4000	751	71	1.49	806	73	2.17	856	76	2.15	909	80	2.48	949	81	2.34
4200	784	76	1.75	836	78	2.54	881	81	2.47	940	85	2.86	974	86	2.64

CFM	1.2			1.4			1.6			1.8			2.0		
	RPM	DDC %	BHP	RPM	DDC %	BHP	RPM	DDC %	BHP	RPM	DDC %	BHP	RPM	DDC %	BHP
1600	762	20	0.85	804	21	0.92	843	25	1.02	877	28	1.10	918	30	1.21
1800	779	25	0.94	821	28	1.02	861	30	1.13	895	33	1.22	935	36	1.34
2000	796	30	1.04	838	33	1.12	878	36	1.25	912	38	1.34	952	41	1.48
2200	814	36	1.15	856	38	1.24	895	41	1.38	930	43	1.48	970	46	1.64
2400	831	41	1.27	873	43	1.37	912	46	1.53	947	49	1.64	987	51	1.81
2600	849	46	1.41	890	49	1.52	929	51	1.69	964	54	1.81	1005	56	2.00
2800	866	51	1.56	908	54	1.68	946	56	1.87	982	59	2.00	1022	61	2.21
3000	883	56	1.72	925	59	1.85	964	61	2.06	999	64	2.21	1039	67	2.44
3200	901	63	1.90	942	65	2.05	981	67	2.28	1016	69	2.45	1057	72	2.70
3400	918	68	2.10	960	71	2.26	998	72	2.52	1034	74	2.70	1074	77	2.98
3600	936	73	2.32	977	76	2.50	1015	78	2.79	1051	81	2.99	1092	84	3.30
3800	953	78	2.57	995	81	2.76	1032	84	3.08	1069	86	3.30	1109	89	3.64
4000	970	84	2.84	1012	86	3.05	1049	89	3.40						
4200	988	89	3.14	1029	90	3.37									

Shaded area indicates air flow below 2550 SCFM (300 SCFM/ton) that is not recommended for High Stage cooling or heating.
Valid motor operating range for DDC% setting is 20 - 90.

10.0 Ton Models: DHC1203D, DHC1204D & DHC1207D with DDC CONTROL • Standard Static to 2.4 Hp (0.2 ~ 0.8 Esp) • Down Flow

CFM	0.2			0.4			0.6			0.8			1.0		
	RPM	DDC %	BHP	RPM	DDC %	BHP	RPM	DDC %	BHP	RPM	DDC %	BHP	RPM	DDC %	BHP
2000	397	22	0.30	495	27	0.36	578	25	0.50	642	32	0.75	-	-	-
2200	420	27	0.35	515	32	0.41	596	30	0.55	659	37	0.83	-	-	-
2400	444	33	0.40	535	37	0.46	614	37	0.61	676	43	0.91	-	-	-
2600	467	38	0.46	554	43	0.52	632	42	0.67	693	48	1.01	-	-	-
2800	490	43	0.53	574	48	0.59	650	48	0.74	710	53	1.12	-	-	-
3000	513	48	0.61	594	53	0.66	668	53	0.82	727	60	1.23	-	-	-
3200	537	53	0.70	613	58	0.75	685	60	0.90	744	65	1.36	-	-	-
3400	560	60	0.80	633	63	0.84	703	65	1.00	761	70	1.51	-	-	-
3600	583	65	0.92	653	68	0.95	721	71	1.10	778	75	1.66	-	-	-
3800	606	70	1.06	673	73	1.07	739	76	1.22	795	81	1.84	-	-	-
4000	630	75	1.22	692	78	1.21	757	83	1.35	812	86	2.03	-	-	-
4200	653	80	1.40	712	83	1.36	775	90	1.49	829	90	2.25	-	-	-

Shaded area indicates air flow below 3000 SCFM (300 SCFM/ton) that is not recommended for High Stage cooling or heating.
Valid motor operating range for DDC% setting is 20 - 90.

HORIZONTAL FLOW

CFM	0.2			0.4			0.6			0.8			1.0		
	RPM	DDC %	BHP	RPM	DDC %	BHP	RPM	DDC %	BHP	RPM	DDC %	BHP	RPM	DDC %	BHP
2000	435	25	0.32	521	32	0.39	603	38	0.53	654	42	0.63	-	-	-
2200	464	32	0.37	546	38	0.45	626	45	0.59	675	48	0.71	-	-	-
2400	494	40	0.43	571	45	0.52	648	51	0.67	696	55	0.80	-	-	-
2600	523	46	0.51	596	51	0.60	671	58	0.75	718	61	0.90	-	-	-
2800	552	55	0.60	621	60	0.69	693	65	0.85	739	68	1.01	-	-	-
3000	581	61	0.70	646	66	0.79	715	71	0.96	760	73	1.14	-	-	-
3200	611	70	0.82	671	73	0.91	738	78	1.08	782	80	1.29	-	-	-
3400	640	76	0.97	695	81	1.05	760	85	1.22	803	86	1.45	-	-	-
3600	669	85	1.13	720	88	1.21	782	90	1.37	824	90	1.64	-	-	-
3800	699	90	1.33	745	90	1.39							-	-	-
4000													-	-	-
4200													-	-	-

Shaded area indicates air flow below 3000 SCFM (300 SCFM/ton) that is not recommended for High Stage cooling or heating.
Valid motor operating range for DDC% setting is 20 - 90.

10.0 Ton Models: DHC1203L, DHC1204L & DHC1207L with DDC CONTROL • Medium Static to 3.5 Hp (0.2 ~ 1.4 Esp) • Down Flow

CFM	0.2			0.4			0.6			0.8			1.0		
	RPM	DDC %	BHP	RPM	DDC %	BHP	RPM	DDC %	BHP	RPM	DDC %	BHP	RPM	DDC %	BHP
1800													715	24	0.78
2000	395	21	0.31	497	26	0.37	527	20	0.57	638	24	0.66	729	29	0.86
2200	418	26	0.35	517	30	0.42	551	25	0.64	656	29	0.73	742	33	0.95
2400	442	30	0.40	537	34	0.47	575	30	0.72	673	33	0.80	756	38	1.05
2600	465	34	0.47	557	38	0.53	599	36	0.81	691	38	0.89	770	43	1.16
2800	489	39	0.54	577	42	0.60	623	41	0.92	708	43	0.98	784	47	1.28
3000	512	43	0.62	597	47	0.68	647	45	1.03	726	47	1.08	798	52	1.42
3200	536	47	0.71	617	51	0.77	671	50	1.16	743	52	1.20	812	56	1.56
3400	559	52	0.81	636	55	0.86	695	55	1.31	761	58	1.32	825	61	1.73
3600	583	56	0.94	656	59	0.97	719	60	1.48	778	63	1.46	839	65	1.91
3800	606	60	1.08	676	63	1.10	743	65	1.67	795	67	1.62	853	71	2.11
4000	630	65	1.24	696	68	1.24	767	69	1.88	813	72	1.79	867	76	2.33
4200	653	69	1.43	716	72	1.39	791	74	2.12	830	77	1.97	881	80	2.58
4400	676	73	1.64	736	76	1.57	815	80	2.39	848	82	2.18	895	85	2.85
4600	700	78	1.89	756	80	1.77	839	85	2.70	865	86	2.41	908	89	3.15
4800	723	82	2.17	776	85	2.00	863	90	3.04	883	90	2.66			
5000	747	86	2.50	796	89	2.25									

CFM	1.2			1.4			1.6			1.8			2.0		
	RPM	DDC %	BHP	RPM	DDC %	BHP	RPM	DDC %	BHP	RPM	DDC %	BHP	RPM	DDC %	BHP
1800	767	34	1.10	821	28	0.90	-	-	-	-	-	-	-	-	-
2000	781	38	1.19	834	32	0.97	-	-	-	-	-	-	-	-	-
2200	795	42	1.29	848	37	1.06	-	-	-	-	-	-	-	-	-
2400	808	46	1.40	861	42	1.14	-	-	-	-	-	-	-	-	-
2600	822	50	1.52	875	47	1.24	-	-	-	-	-	-	-	-	-
2800	836	54	1.64	888	51	1.34	-	-	-	-	-	-	-	-	-
3000	850	58	1.78	901	56	1.45	-	-	-	-	-	-	-	-	-
3200	863	63	1.93	915	61	1.57	-	-	-	-	-	-	-	-	-
3400	877	67	2.09	928	65	1.71	-	-	-	-	-	-	-	-	-
3600	891	71	2.26	942	71	1.85	-	-	-	-	-	-	-	-	-
3800	904	74	2.45	955	76	2.00	-	-	-	-	-	-	-	-	-
4000	918	78	2.66	969	81	2.17	-	-	-	-	-	-	-	-	-
4200	932	82	2.88	982	85	2.35	-	-	-	-	-	-	-	-	-
4400	946	86	3.12	995	90	2.54	-	-	-	-	-	-	-	-	-
4600	959	90	3.38				-	-	-	-	-	-	-	-	-
4800							-	-	-	-	-	-	-	-	-
5000							-	-	-	-	-	-	-	-	-

Shaded area indicates air flow below 3000 SCFM (300 SCFM/ton) that is not recommended for High Stage cooling or heating.
Valid motor operating range for DDC% setting is 20 - 90.

HORIZONTAL FLOW

CFM	0.2			0.4			0.6			0.8			1.0		
	RPM	DDC %	BHP	RPM	DDC %	BHP	RPM	DDC %	BHP	RPM	DDC %	BHP	RPM	DDC %	BHP
1800													736	25	0.80
2000	393	21	0.28	509	26	0.38	582	21	0.66	653	24	0.65	751	29	0.88
2200	419	25	0.32	530	30	0.43	601	25	0.74	672	29	0.72	766	34	0.97
2400	444	29	0.37	550	34	0.48	620	30	0.84	690	34	0.80	780	39	1.08
2600	470	34	0.42	571	38	0.55	639	36	0.94	708	39	0.88	795	43	1.19
2800	495	38	0.48	591	43	0.62	658	41	1.06	727	43	0.97	809	49	1.31
3000	520	43	0.56	612	47	0.69	677	46	1.20	745	49	1.08	824	54	1.45
3200	546	47	0.64	632	51	0.78	697	50	1.35	764	54	1.19	839	58	1.60
3400	571	52	0.74	653	55	0.88	716	55	1.52	782	59	1.31	853	63	1.77
3600	596	56	0.85	674	60	0.99	735	60	1.72	800	64	1.45	868	68	1.96
3800	622	60	0.98	694	64	1.12	754	65	1.75	819	69	1.61	883	72	2.16
4000	647	65	1.12	715	68	1.26	773	71	1.78	837	73	1.77	897	77	2.39
4200	672	69	1.29	735	72	1.43	792	74	1.87	855	78	1.96	912	82	2.64
4400	698	74	1.48	756	77	1.61	811	80	2.11	874	84	2.17	927	86	2.92
4600	723	78	1.71	777	81	1.81	830	85	2.35	892	89	2.40	941	90	3.23
4800	749	82	1.96	797	85	2.04	849	90	2.63						
5000	774	87	2.26	818	89	2.30									

CFM	1.2			1.4			1.6			1.8			2.0		
	RPM	DDC %	BHP	RPM	DDC %	BHP	RPM	DDC %	BHP	RPM	DDC %	BHP	RPM	DDC %	BHP
1800	865	34	1.10	832	29	0.93	-	-	-	-	-	-	-	-	-
2000	873	39	1.19	849	33	1.03	-	-	-	-	-	-	-	-	-
2200	880	43	1.29	867	38	1.13	-	-	-	-	-	-	-	-	-
2400	888	47	1.40	885	43	1.25	-	-	-	-	-	-	-	-	-
2600	896	51	1.52	902	49	1.38	-	-	-	-	-	-	-	-	-
2800	903	55	1.64	920	54	1.53	-	-	-	-	-	-	-	-	-
3000	911	59	1.78	938	59	1.69	-	-	-	-	-	-	-	-	-
3200	918	63	1.93	955	63	1.87	-	-	-	-	-	-	-	-	-
3400	926	68	2.09	973	68	2.06	-	-	-	-	-	-	-	-	-
3600	934	72	2.26	991	73	2.28	-	-	-	-	-	-	-	-	-
3800	941	76	2.45	1009	78	2.52	-	-	-	-	-	-	-	-	-
4000	949	80	2.65	1026	84	2.79	-	-	-	-	-	-	-	-	-
4200	957	84	2.87	1044	87	3.08	-	-	-	-	-	-	-	-	-
4400	964	87	3.11	1062	90	3.40	-	-	-	-	-	-	-	-	-
4600	972	90	3.37				-	-	-	-	-	-	-	-	-
4800							-	-	-	-	-	-	-	-	-
5000							-	-	-	-	-	-	-	-	-

Shaded area indicates air flow below 3000 SCFM (300 SCFM/ton) that is not recommended for High Stage cooling or heating.
Valid motor operating range for DDC% setting is 20 - 90.

10.0 Ton Models: DHC1203W, DHC1204W & DHC1207W with DDC CONTROL Controls • High Static to 3.5 Hp (0.2 ~ 2.0 Esp) • Down Flow

CFM	0.2			0.4			0.6			0.8			1.0		
	RPM	DDC %	BHP	RPM	DDC %	BHP	RPM	DDC %	BHP	RPM	DDC %	BHP	RPM	DDC %	BHP
1800													704	23	0.77
2000	395	23	0.31	499	25	0.39	559	19	0.53	636	23	0.67	719	28	0.85
2200	418	26	0.35	519	30	0.43	579	24	0.58	654	28	0.74	734	32	0.94
2400	442	30	0.40	539	34	0.49	599	29	0.65	672	33	0.82	749	37	1.03
2600	465	34	0.47	559	38	0.55	619	34	0.71	689	38	0.91	764	42	1.14
2800	489	39	0.54	579	43	0.62	639	39	0.79	707	43	1.00	779	47	1.26
3000	512	43	0.62	599	47	0.70	659	45	0.87	725	47	1.11	794	51	1.40
3200	536	47	0.71	619	51	0.79	679	50	0.96	743	52	1.23	809	56	1.54
3400	559	52	0.81	639	56	0.89	699	55	1.07	761	58	1.35	824	61	1.70
3600	583	56	0.94	659	60	1.01	719	60	1.18	779	63	1.50	839	67	1.88
3800	606	60	1.08	680	64	1.14	738	64	1.30	796	68	1.65	853	71	2.08
4000	630	65	1.24	700	68	1.28	758	69	1.44	814	73	1.83	868	76	2.30
4200	653	69	1.43	720	73	1.44	778	74	1.59	832	78	2.02	883	81	2.54
4400	677	73	1.64	740	77	1.63	798	80	1.76	850	82	2.23	898	85	2.81
4600	701	78	1.89	760	81	1.83	818	85	1.94	868	87	2.47			
4800	724	82	2.17	780	86	2.07	838	90	2.15	885	90	2.73			
5000	748	86	2.50	800	90	2.33									

CFM	1.2			1.4			1.6			1.8			2.0		
	RPM	DDC %	BHP	RPM	DDC %	BHP	RPM	DDC %	BHP	RPM	DDC %	BHP	RPM	DDC %	BHP
1800	759	20	0.74	837	23	0.87	834	41	1.49	826	49	1.63	857	52	1.80
2000	774	25	0.80	849	28	0.94	850	45	1.58	847	52	1.70	879	56	1.87
2200	788	30	0.87	861	33	1.02	866	49	1.68	868	56	1.77	900	59	1.95
2400	803	36	0.94	873	38	1.11	882	52	1.78	889	59	1.84	922	63	2.03
2600	818	41	1.02	885	43	1.20	898	56	1.89	910	63	1.92	943	65	2.11
2800	832	46	1.11	897	49	1.30	914	60	2.01	931	65	1.99	965	69	2.19
3000	847	51	1.20	909	54	1.41	931	64	2.13	952	69	2.08	987	72	2.28
3200	862	56	1.30	921	60	1.52	947	68	2.26	972	73	2.16	1008	76	2.38
3400	876	61	1.41	933	65	1.65	963	72	2.40	993	76	2.25	1030	78	2.47
3600	891	68	1.52	945	71	1.79	979	76	2.55	1014	80	2.34	1052	82	2.57
3800	905	73	1.65	957	76	1.94	995	80	2.71	1035	82	2.44	1073	85	2.68
4000	920	78	1.79	969	81	2.10	1011	84	2.88	1056	86	2.54	1095	89	2.79
4200	935	84	1.94	981	86	2.27	1027	87	3.06	1077	90	2.64	1116	90	2.90
4400	949	89	2.10	993	90	2.46	1043	90	3.08						
4600															
4800															
5000															

Shaded area indicates air flow below 3000 SCFM (300 SCFM/ton) that is not recommended for High Stage cooling or heating.
Valid motor operating range for DDC% setting is 20 - 90.

HORIZONTAL FLOW

CFM	0.2			0.4			0.6			0.8			1.0		
	RPM	DDC %	BHP	RPM	DDC %	BHP	RPM	DDC %	BHP	RPM	DDC %	BHP	RPM	DDC %	BHP
1800	370	16	0.27	490	21	0.35	574	15	0.53	629	17	0.61	707	23	0.75
2000	395	21	0.31	510	26	0.39	592	20	0.59	648	23	0.67	725	28	0.83
2200	420	25	0.35	531	30	0.45	610	25	0.65	667	28	0.75	744	33	0.92
2400	446	30	0.40	552	34	0.50	629	30	0.72	687	33	0.82	762	38	1.01
2600	471	34	0.47	573	39	0.57	647	36	0.79	706	38	0.91	781	43	1.12
2800	496	39	0.54	594	43	0.64	665	39	0.88	725	43	1.01	799	47	1.24
3000	521	43	0.62	615	47	0.72	684	45	0.97	745	49	1.11	818	52	1.37
3200	546	49	0.71	635	52	0.81	702	50	1.07	764	54	1.23	836	58	1.51
3400	571	52	0.81	656	56	0.91	720	55	1.18	783	59	1.36	855	63	1.67
3600	596	58	0.94	677	60	1.03	739	60	1.31	802	64	1.50	873	68	1.85
3800	622	61	1.08	698	65	1.16	757	65	1.44	822	69	1.66	892	73	2.04
4000	647	67	1.24	719	69	1.31	775	71	1.59	841	74	1.83	910	77	2.26
4200	672	71	1.43	740	73	1.48	794	74	1.76	860	80	2.03	929	82	2.49
4400	697	76	1.64	760	78	1.67	812	80	1.95	880	85	2.24	947	87	2.75
4600	722	80	1.89	781	82	1.88	830	85	2.15	899	90	2.47	966	90	3.04
4800	747	85	2.17	802	86	2.12	849	90	2.38						
5000	773	89	2.50	823	90	2.39									

CFM	1.2			1.4			1.6			1.8			2.0		
	RPM	DDC %	BHP	RPM	DDC %	BHP	RPM	DDC %	BHP	RPM	DDC %	BHP	RPM	DDC %	BHP
1800	581	26	0.95	827	32	1.15	806	43	1.57	924	50	1.92	905	51	1.96
2000	613	30	1.03	844	37	1.25	828	47	1.67	940	54	2.03	926	55	2.08
2200	645	36	1.12	860	41	1.35	851	51	1.77	955	56	2.16	948	59	2.21
2400	677	41	1.21	877	46	1.47	873	55	1.88	971	60	2.29	970	61	2.35
2600	709	46	1.31	894	51	1.59	895	59	2.00	987	64	2.44	991	65	2.49
2800	741	51	1.42	910	55	1.72	917	63	2.12	1002	67	2.59	1013	69	2.65
3000	773	55	1.54	927	60	1.86	940	67	2.26	1018	71	2.75	1034	73	2.81
3200	805	60	1.67	944	65	2.02	962	71	2.39	1033	74	2.92	1056	76	2.99
3400	837	65	1.81	960	69	2.19	984	74	2.54	1049	78	3.10	1077	80	3.17
3600	869	71	1.96	977	74	2.37	1006	78	2.70	1065	81	3.29	1099	84	3.37
3800	901	76	2.12	994	80	2.57	1029	82	2.87	1080	85	3.49	1121	87	3.57
4000	933	80	2.30	1011	84	2.78	1051	86	3.04						
4200	965	85	2.49	1027	89	3.01	1073	90	3.23						
4400	997	90	2.70												
4600															
4800															
5000															

Shaded area indicates air flow below 3000 SCFM (300 SCFM/ton) that is not recommended for High Stage cooling or heating.
Valid motor operating range for DDC% setting is 20 - 90.

12.5 Ton Models: DHC1503D, DHC1504D & DHC1507D with DDC CONTROL • Standard Static to 3.5 Hp (0.2 ~ 0.8 Esp) • Down Flow

CFM	0.2			0.4			0.6			0.8			1.0		
	RPM	DDC %	BHP	RPM	DDC %	BHP	RPM	DDC %	BHP	RPM	DDC %	BHP	RPM	DDC %	BHP
2000							674	20	0.61	785	29	0.85	-	-	-
2200							682	24	0.66	790	33	0.92	-	-	-
2400	448	17	0.34	569	20	0.54	690	28	0.72	795	37	1.00	-	-	-
2600	463	23	0.39	580	25	0.60	698	33	0.78	800	41	1.08	-	-	-
2800	478	26	0.44	592	30	0.66	706	37	0.84	806	45	1.17	-	-	-
3000	493	32	0.49	603	34	0.73	714	42	0.91	811	49	1.27	-	-	-
3200	508	36	0.56	615	39	0.80	722	46	0.99	816	52	1.38	-	-	-
3400	523	41	0.63	626	43	0.89	730	50	1.07	821	56	1.49	-	-	-
3600	539	45	0.71	638	49	0.98	738	55	1.16	826	60	1.62	-	-	-
3800	554	50	0.80	649	54	1.09	746	59	1.25	832	64	1.75	-	-	-
4000	569	54	0.90	661	58	1.20	754	64	1.36	837	69	1.90	-	-	-
4200	584	59	1.01	672	63	1.33	762	68	1.47	842	73	2.06	-	-	-
4400	599	63	1.14	684	67	1.47	770	72	1.59	847	77	2.23	-	-	-
4600	614	68	1.29	695	72	1.62	778	77	1.73	852	81	2.41	-	-	-
4800	629	72	1.45	706	77	1.79	786	81	1.87	857	85	2.61	-	-	-

Shaded area indicates air flow below 3750 SCFM (300 SCFM/ton) that is not recommended for High Stage cooling or heating.
Valid motor operating range for DDC% setting is 20 - 90.

HORIZONTAL FLOW

CFM	0.2			0.4			0.6			0.8			1.0		
	RPM	DDC %	BHP	RPM	DDC %	BHP	RPM	DDC %	BHP	RPM	DDC %	BHP	RPM	DDC %	BHP
2000										711	26	0.79	-	-	-
2200				615	23	0.71	615	23	0.54	725	32	0.88	-	-	-
2400	484	23	0.37	634	28	0.78	634	28	0.60	738	36	0.97	-	-	-
2600	507	28	0.41	653	32	0.87	653	32	0.66	752	39	1.07	-	-	-
2800	529	32	0.47	672	37	0.96	672	37	0.73	766	45	1.18	-	-	-
3000	551	37	0.53	691	42	1.06	691	42	0.80	779	49	1.31	-	-	-
3200	573	41	0.59	710	47	1.17	710	47	0.89	793	52	1.45	-	-	-
3400	596	46	0.67	729	51	1.29	729	51	0.98	806	58	1.60	-	-	-
3600	618	51	0.76	748	56	1.43	748	56	1.09	820	61	1.77	-	-	-
3800	640	55	0.85	767	61	1.58	767	61	1.20	833	65	1.95	-	-	-
4000	663	60	0.96	786	67	1.74	786	67	1.33	847	71	2.16	-	-	-
4200	685	64	1.08	806	71	1.93	806	71	1.47	861	74	2.38	-	-	-
4400	707	69	1.22	825	76	2.13	825	76	1.62	874	78	2.63	-	-	-
4600	729	74	1.38	844	81	2.35	844	81	1.79	888	84	2.91	-	-	-
4800	752	78	1.55	863	86	2.60	863	86	1.98	901	87	3.22	-	-	-

Shaded area indicates air flow below 3750 SCFM (300 SCFM/ton) that is not recommended for High Stage cooling or heating.
Valid motor operating range for DDC% setting is 20 - 90.

12.5 Ton Models: DHC1503L, DHC1504L & DHC1507L with DDC CONTROL • Medium Static to 3.5 Hp (0.2 ~ 1.4 Esp) • Down Flow

CFM	0.2			0.4			0.6			0.8			1.0		
	RPM	DDC %	BHP	RPM	DDC %	BHP	RPM	DDC %	BHP	RPM	DDC %	BHP	RPM	DDC %	BHP
2200													834	29	1.01
2400										772	23	0.93	843	33	1.09
2600							694	24	0.85	779	28	1.00	851	38	1.19
2800	484	26	0.48	591	21	0.62	702	29	0.92	787	33	1.09	859	43	1.28
3000	499	30	0.54	603	26	0.67	711	34	0.99	795	39	1.18	867	49	1.39
3200	513	36	0.61	614	32	0.73	719	39	1.08	802	45	1.28	876	54	1.51
3400	527	39	0.69	625	38	0.79	727	45	1.17	810	50	1.38	884	58	1.63
3600	541	45	0.78	636	43	0.86	736	50	1.26	818	55	1.50	892	63	1.77
3800	556	50	0.88	648	49	0.93	744	55	1.37	825	60	1.62	900	68	1.92
4000	570	54	0.99	659	55	1.00	753	60	1.48	833	67	1.76	909	73	2.08
4200	584	59	1.11	670	60	1.09	761	67	1.61	841	72	1.90	917	78	2.25
4400	599	63	1.26	682	65	1.18	769	72	1.74	849	77	2.06	925	84	2.44
4600	613	68	1.42	693	71	1.28	778	77	1.88	856	82	2.23	934	87	2.64
4800	627	73	1.60	704	77	1.38	786	82	2.04	864	87	2.42	942	90	2.86
5000	641	77	1.80	716	82	1.50	795	87	2.21	872	90	2.62			

CFM	1.2			1.4			1.6			1.8			2.0		
	RPM	DDC %	BHP	RPM	DDC %	BHP	RPM	DDC %	BHP	RPM	DDC %	BHP	RPM	DDC %	BHP
2200	880	43	1.50	1173	30	1.77	-	-	-	-	-	-	-	-	-
2400	891	47	1.59	1179	36	1.88	-	-	-	-	-	-	-	-	-
2600	902	51	1.69	1184	39	2.00	-	-	-	-	-	-	-	-	-
2800	913	56	1.79	1189	43	2.12	-	-	-	-	-	-	-	-	-
3000	923	60	1.91	1195	47	2.26	-	-	-	-	-	-	-	-	-
3200	934	64	2.02	1200	51	2.39	-	-	-	-	-	-	-	-	-
3400	945	68	2.15	1206	56	2.54	-	-	-	-	-	-	-	-	-
3600	956	72	2.28	1211	60	2.70	-	-	-	-	-	-	-	-	-
3800	966	76	2.42	1217	64	2.87	-	-	-	-	-	-	-	-	-
4000	977	80	2.57	1222	68	3.04	-	-	-	-	-	-	-	-	-
4200	988	84	2.73	1227	72	3.23	-	-	-	-	-	-	-	-	-
4400	999	87	2.90	1233	76	3.43	-	-	-	-	-	-	-	-	-
4600	1009	90	3.08	1238	81	3.64	-	-	-	-	-	-	-	-	-
4800							-	-	-	-	-	-	-	-	-
5000							-	-	-	-	-	-	-	-	-

Shaded area indicates air flow below 3750 SCFM (300 SCFM/ton) that is not recommended for High Stage cooling or heating.
Valid motor operating range for DDC% setting is 20 - 90.

HORIZONTAL FLOW

CFM	0.2			0.4			0.6			0.8			1.0		
	RPM	DDC %	BHP	RPM	DDC %	BHP	RPM	DDC %	BHP	RPM	DDC %	BHP	RPM	DDC %	BHP
2200													731	28	0.95
2400										707	23	0.93	749	33	1.05
2600							669	23	0.83	725	28	1.02	767	38	1.16
2800	536	30	0.58	597	23	0.65	686	29	0.92	742	34	1.13	786	43	1.28
3000	557	36	0.65	619	29	0.72	704	34	1.01	759	39	1.25	804	49	1.42
3200	578	41	0.74	641	36	0.80	721	41	1.12	776	46	1.38	822	52	1.57
3400	599	46	0.83	663	41	0.88	739	47	1.24	793	51	1.53	841	58	1.73
3600	620	51	0.93	685	47	0.97	756	52	1.37	810	56	1.69	859	63	1.91
3800	641	55	1.05	707	54	1.08	774	59	1.51	828	63	1.86	877	68	2.11
4000	662	60	1.19	728	60	1.19	791	64	1.67	845	68	2.06	896	73	2.34
4200	683	65	1.34	750	65	1.31	808	71	1.84	862	74	2.28	914	78	2.58
4400	704	71	1.51	772	72	1.45	826	76	2.04	879	80	2.52	932	84	2.85
4600	725	76	1.70	794	78	1.60	843	82	2.25	896	85	2.78	950	89	3.01
4800	747	80	1.92	816	85	1.77	861	87	2.49	913	90	3.07			
5000	768	85	2.17	838	90	1.96	878	90	2.75						

CFM	1.2			1.4			1.6			1.8			2.0		
	RPM	DDC %	BHP	RPM	DDC %	BHP	RPM	DDC %	BHP	RPM	DDC %	BHP	RPM	DDC %	BHP
2200	799	32	0.90	867	36	1.10	-	-	-	-	-	-	-	-	-
2400	814	37	0.97	880	41	1.19	-	-	-	-	-	-	-	-	-
2600	829	42	1.05	894	46	1.29	-	-	-	-	-	-	-	-	-
2800	844	46	1.14	907	51	1.40	-	-	-	-	-	-	-	-	-
3000	859	51	1.23	920	55	1.51	-	-	-	-	-	-	-	-	-
3200	874	56	1.34	934	60	1.64	-	-	-	-	-	-	-	-	-
3400	889	61	1.45	947	65	1.78	-	-	-	-	-	-	-	-	-
3600	904	67	1.57	960	69	1.92	-	-	-	-	-	-	-	-	-
3800	919	72	1.70	974	74	2.08	-	-	-	-	-	-	-	-	-
4000	934	76	1.84	987	80	2.26	-	-	-	-	-	-	-	-	-
4200	949	81	1.99	1000	84	2.45	-	-	-	-	-	-	-	-	-
4400	964	86	2.16	1013	89	2.65	-	-	-	-	-	-	-	-	-
4600	979	90	2.90				-	-	-	-	-	-	-	-	-
4800							-	-	-	-	-	-	-	-	-
5000							-	-	-	-	-	-	-	-	-

Shaded area indicates air flow below 3750 SCFM (300 SCFM/ton) that is not recommended for High Stage cooling or heating.
Valid motor operating range for DDC% setting is 20 - 90.

DDC Airflow

12.5 Ton Models: DHC1503W, DHC1504W & DHC1507W with DDC CONTROL • High Static to 3.5 Hp (0.2 ~ 2.0 Esp) • Down Flow

CFM	0.2			0.4			0.6			0.8			1.0		
	RPM	DDC %	BHP	RPM	DDC %	BHP	RPM	DDC %	BHP	RPM	DDC %	BHP	RPM	DDC %	BHP
2400															
2600													796	22	0.94
2800										751	20	1.04	819	27	1.04
3000							698	22	0.97	778	25	1.17	841	32	1.15
3200	625	36	0.84	657	23	0.86	726	27	1.09	806	31	1.32	864	37	1.27
3400	654	40	0.96	687	29	0.97	755	33	1.23	833	37	1.49	886	42	1.40
3600	683	44	1.10	717	35	1.09	783	39	1.38	860	42	1.68	908	47	1.55
3800	712	48	1.27	748	41	1.23	811	44	1.56	887	48	1.89	931	52	1.71
4000	741	52	1.46	778	47	1.39	839	50	1.76	914	54	2.13	953	57	1.90
4200	770	57	1.68	809	52	1.56	867	56	1.98	941	59	2.40	976	62	2.09
4400	799	61	1.93	839	58	1.76	895	61	2.24	968	65	2.71	998	67	2.31
4600	828	65	2.22	869	64	1.99	923	67	2.52	996	71	3.06	1021	73	2.56
4800	857	69	2.56	900	70	2.24	952	73	2.84	1023	76	3.45	1043	78	2.83
5000	886	74	2.94	930	75	2.52	980	78	3.21	1050	82	3.89	1066	83	3.12
5200	915	78	3.39	961	81	2.85	1008	84	3.62	1077	88	4.38	1088	88	3.45
5400	944	82	3.90	991	87	3.21	1036	89	4.08	1104	90	4.94	1111	90	3.82
5600	973	86	4.48	1021	90	3.62									

CFM	1.2			1.4			1.6			1.8			2.0		
	RPM	DDC %	BHP	RPM	DDC %	BHP	RPM	DDC %	BHP	RPM	DDC %	BHP	RPM	DDC %	BHP
2400	1010	27	1.13	1011	34	1.59	1060	37	1.82	1107	39	1.82	1127	44	2.11
2600	1027	31	1.22	1021	38	1.72	1069	41	1.97	1116	43	1.93	1138	48	2.29
2800	1044	36	1.33	1031	42	1.86	1079	45	2.13	1126	47	2.05	1149	52	2.48
3000	1061	40	1.44	1041	46	2.02	1088	49	2.31	1136	51	2.18	1161	56	2.69
3200	1077	45	1.56	1052	50	2.19	1098	53	2.50	1146	55	2.31	1172	60	2.91
3400	1094	49	1.69	1062	54	2.37	1107	57	2.71	1155	59	2.45	1184	63	3.15
3600	1111	53	1.83	1072	58	2.57	1117	61	2.94	1165	63	2.61	1195	67	3.41
3800	1128	58	1.98	1082	62	2.78	1126	65	3.18	1175	67	2.77	1206	71	3.70
4000	1145	62	2.14	1092	66	3.01	1136	69	3.45	1184	71	2.94	1218	75	4.01
4200	1161	67	2.32	1102	70	3.26	1145	73	3.73	1194	75	3.12	1229	79	4.34
4400	1178	71	2.51	1112	75	3.53	1155	77	4.05	1204	79	3.31	1241	83	4.70
4600	1195	76	2.72	1122	79	3.83	1164	81	4.38	1213	83	3.52	1252	87	5.09
4800	1212	80	2.95	1132	83	4.15	1173	85	4.75	1223	87	3.74			
5000	1229	85	3.20	1142	87	4.49	1183	89	5.14	1233	90	3.97			
5200	1246	89	3.46	1153	90	4.87	1192	90	5.57						
5400															
5600															

Shaded area indicates air flow below 3750 SCFM (300 SCFM/ton) that is not recommended for High Stage cooling or heating.
Valid motor operating range for DDC% setting is 20 - 90.

DDC Airflow

HORIZONTAL FLOW

CFM	0.2			0.4			0.6			0.8			1.0		
	RPM	DDC %	BHP	RPM	DDC %	BHP	RPM	DDC %	BHP	RPM	DDC %	BHP	RPM	DDC %	BHP
2400															
2600													797	23	1.08
2800										741	21	0.96	813	28	1.19
3000	563	31	0.56	628	21	0.97	686	24	0.88	761	26	1.06	830	33	1.32
3200	588	35	0.63	650	26	1.10	707	30	0.97	780	32	1.17	846	38	1.46
3400	613	39	0.71	673	31	1.24	729	35	1.07	800	37	1.29	862	42	1.61
3600	637	44	0.80	695	37	1.40	750	40	1.19	819	42	1.43	879	47	1.78
3800	662	48	0.90	718	42	1.57	772	45	1.31	839	48	1.58	895	52	1.97
4000	687	52	1.02	740	47	1.77	794	50	1.45	858	53	1.75	911	57	2.17
4200	712	56	1.15	763	52	2.00	815	56	1.60	878	58	1.93	927	61	2.40
4400	736	60	1.30	786	58	2.25	837	61	1.77	897	64	2.13	944	66	2.66
4600	761	64	1.46	808	63	2.54	858	66	1.96	916	69	2.36	960	71	2.93
4800	786	68	1.65	831	68	2.87	880	71	2.16	936	74	2.60	976	76	3.24
5000	811	72	1.86	853	73	3.23	901	77	2.39	955	79	2.88	992	81	3.58
5200	836	76	2.09	876	79	3.64	923	82	2.64	975	85	3.18	1009	85	3.96
5400	860	81	2.36	898	84	4.11	944	87	2.92	994	90	3.51	1025	90	4.38
5600	885	85	2.66	921	89	4.63	966	90	3.22						

CFM	1.2			1.4			1.6			1.8			2.0		
	RPM	DDC %	BHP	RPM	DDC %	BHP	RPM	DDC %	BHP	RPM	DDC %	BHP	RPM	DDC %	BHP
2400	842	21	1.13	909	24	1.31	1012	31	1.45	1082	40	2.03	1118	26	2.21
2600	857	26	1.24	923	29	1.45	1022	36	1.57	1089	43	2.20	1125	29	2.34
2800	872	31	1.37	937	34	1.60	1031	40	1.70	1096	47	2.38	1132	32	2.49
3000	888	36	1.52	951	39	1.77	1041	44	1.85	1103	51	2.58	1140	35	2.64
3200	903	40	1.68	965	43	1.96	1051	49	2.00	1110	55	2.79	1147	38	2.81
3400	918	45	1.86	979	48	2.16	1061	53	2.17	1117	59	3.03	1154	41	2.98
3600	934	50	2.05	993	53	2.39	1071	57	2.35	1124	63	3.28	1162	45	3.17
3800	949	55	2.27	1007	57	2.64	1080	62	2.54	1131	66	3.55	1169	48	3.36
4000	965	59	2.50	1020	62	2.92	1090	66	2.76	1138	70	3.85	1176	51	3.57
4200	980	64	2.77	1034	67	3.23	1100	70	2.98	1145	74	4.17	1184	54	3.79
4400	995	69	3.06	1048	72	3.57	1110	75	3.23	1152	78	4.52	1191	57	4.02
4600	1011	74	3.38	1062	76	3.94	1120	79	3.50	1159	82	4.89	1198	60	4.27
4800	1026	78	3.74	1076	81	4.36	1130	84	3.79						
5000	1041	83	4.13	1090	86	4.82	1139	88	4.11						
5200	1057	88	4.56	1104	90	5.32	1149	90	4.45						
5400	1072	90	5.04												
5600															

Shaded area indicates air flow below 3750 SCFM (300 SCFM/ton) that is not recommended for High Stage cooling or heating.
Valid motor operating range for DDC% setting is 20 - 90.

Static Pressure

7.5-12.5 TONS		
DOWNFLOW ECONOMIZER PRESSURE DROP		
Cabinet	CFM	SP in.wg.
7.5 Ton	2250	.04"
	3000	.07"
	3750	.11"
8.5 Ton	2550	.06"
	3400	.10"
	4250	.16"
10 Ton	3000	.08"
	4000	.13"
	5000	.22"
12.5 Ton	3750	.14"
	5000	.24"
	6250	.36"

7.5-12.5 TONS		
HORIZONTAL ECONOMIZER PRESSURE DROP		
Cabinet	CFM	SP in.wg.
7.5 Ton	2250	.05"
	3000	.07"
	3750	.13"
8.5 Ton	2550	.07"
	3400	.13"
	4250	.18"
10 Ton	3000	.07"
	4000	.12"
	5000	.19"
12.5 Ton	3750	.09"
	5000	.15"
	6250	.24"

Electrical Data

Model Number	Electrical Rating	Compressor			Outdoor Fan Motor			Indoor Fan Motor			Optional Electric Heat			Optional Powered Convienience Outlet	Optional Power Exhaust	Power Supply	
		QTY	RLA	LRA	QTY	HP	FLA	Type	HP	FLA	Part #	KW*	FLA	FLA	FLA	MCA	MOP
DHC0903D	208/230/3/60	2	12.2	120	2	0.33	2.0	1	1.7	5.8	-	-	-	-	-	37.2/37.2	45/45
											-	-	-	9.6/8.7	-	46.8/45.9	50/50
											-	-	-	-	3.3/3.0 (2.4)	40.5/40.2	50/50
											-	-	-	9.6/8.7	3.3/3.0 (2.4)	50.1/48.9	60/60
											EH*D-3M10	7.5/10.0	20.8/24.1	-	-	37.2/37.3	45/45
														9.6/8.7	-	46.8/48.2	50/50
														-	3.3/3.0 (2.4)	40.5/41.1	50/50
														9.6/8.7	3.3/3.0 (2.4)	50.1/51.9	60/60
											EH*D-3M15	11.3/15.0	31.3/36.1	-	-	46.3/52.4	50/60
														9.6/8.7	-	58.3/63.2	60/70
														-	3.3/3.0 (2.4)	50.5/56.1	60/60
														9.6/8.7	3.3/3.0 (2.4)	62.5/67.0	70/70
											EH*D-3M20	15.0/20.0	41.7/48.1	-	-	59.4/67.4	60/70
														9.6/8.7	-	71.4/78.3	80/80
														-	3.3/3.0 (2.4)	63.5/71.1	70/80
														9.6/8.7	3.3/3.0 (2.4)	75.5/82.0	80/90
											EH*D-3M30	22.5/30.0	62.5/72.2	-	-	85.4/97.5	90/100
														9.6/8.7	-	97.4/108	100/110
														-	3.3/3.0 (2.4)	89.6/101	90/110
														9.6/8.7	3.3/3.0 (2.4)	102/112	110/125
											EH*D-3M45	33.8/45.0	93.8/108	-	-	125/143	125/150
														9.6/8.7	-	137/153	150/175
														-	3.3/3.0 (2.4)	129/146	150/150
														9.6/8.7	3.3/3.0 (2.4)	141/157	150/175
DHC0903L	208/230/3/60	2	12.2	120	2	0.33	2.0	1	2.4	8.0	-	-	-	-	-	39.4/39.4	50/50
											-	-	-	9.6/8.7	-	49.0/48.1	60/60
											-	-	-	-	3.3/3.0 (2.4)	42.7/42.4	50/50
											-	-	-	9.6/8.7	3.3/3.0 (2.4)	52.3/51.1	60/60
											EH*D-3M10	7.5/10.0	20.8/24.1	-	-	39.4/40.1	50/50
														9.6/8.7	-	49.0/50.9	60/60
														-	3.3/3.0 (2.4)	42.7/43.8	50/50
														9.6/8.7	3.3/3.0 (2.4)	52.3/54.7	60/60
											EH*D-3M15	11.3/15.0	31.3/36.1	-	-	49.1/55.1	50/60
														9.6/8.7	-	61.1/66.0	70/70
														-	3.3/3.0 (2.4)	53.2/58.9	60/60
														9.6/8.7	3.3/3.0 (2.4)	65.2/69.7	70/70
											EH*D-3M20	15.0/20.0	41.7/48.1	-	-	62.1/70.1	70/80
														9.6/8.7	-	74.1/81.0	80/90
														-	3.3/3.0 (2.4)	66.3/73.9	70/80
														9.6/8.7	3.3/3.0 (2.4)	78.3/84.8	80/90
											EH*D-3M30	22.5/30.0	62.5/72.2	-	-	88.2/100	90/110
														9.6/8.7	-	100/111	110/125
														-	3.3/3.0 (2.4)	92.3/104	100/110
														9.6/8.7	3.3/3.0 (2.4)	104/115	110/125
											EH*D-3M45	33.8/45.0	93.8/108	-	-	127/145	150/150
														9.6/8.7	-	139/156	150/175
														-	3.3/3.0 (2.4)	131/149	150/150
														9.6/8.7	3.3/3.0 (2.4)	143/160	150/175

Electrical Data

Model Number	Electrical Rating	Compressor			Outdoor Fan Motor			Indoor Fan Motor			Optional Electric Heat			Optional Powered Convienience Outlet	Optional Power Exhaust	Power Supply	
		QTY	RLA	LRA	QTY	HP	FLA	Type	HP	FLA	Part #	KW*	FLA	FLA	FLA	MCA	MOP
DHC0903W	208/230/3/60	2	12.2	120	2	0.33	2.0	1	3.5	10.9	-	-	-	-	-	42.3/42.3	50/50
											-	-	-	9.6/8.7	-	51.9/51.0	60/60
											-	-	-	-	3.3/3.0 (2.4)	45.6/45.3	50/50
											-	-	-	9.6/8.7	3.3/3.0 (2.4)	55.2/54.0	60/60
											EH*D-3M10	7.5/10.0	20.8/24.1	-	-	42.3/43.7	50/50
														9.6/8.7	-	51.9/54.6	60/60
														-	3.3/3.0 (2.4)	45.6/47.4	50/50
														9.6/8.7	3.3/3.0 (2.4)	55.8/58.3	60/60
											EH*D-3M15	11.3/15.0	31.3/36.1	-	-	52.7/58.7	60/60
														9.6/8.7	-	64.7/69.6	70/70
														-	3.3/3.0 (2.4)	56.9/62.5	60/70
														9.6/8.7	3.3/3.0 (2.4)	68.9/73.4	70/80
											EH*D-3M20	15.0/20.0	41.7/48.1	-	-	65.7/73.8	70/80
														9.6/8.7	-	77.7/84.6	80/90
														-	3.3/3.0 (2.4)	69.9/77.5	70/80
														9.6/8.7	3.3/3.0 (2.4)	81.9/88.4	90/90
											EH*D-3M30	22.5/30.0	62.5/72.2	-	-	91.8/104	100/110
														9.6/8.7	-	104/115	110/125
														-	3.3/3.0 (2.4)	96.0/108	100/110
														9.6/8.7	3.3/3.0 (2.4)	108/118	110/125
											EH*D-3M45	33.8/45.0	93.8/108	-	-	131/149	150/150
														9.6/8.7	-	143/160	150/175
														-	3.3/3.0 (2.4)	135/153	150/175
														9.6/8.7	3.3/3.0 (2.4)	147/164	150/175
DHC0904D	460/3/60	2	5.8	55.1	2	0.33	0.85	1	1.7	4.0	-	-	-	-	-	18.7	20
											-	-	-	4.3	-	23.0	25
											-	-	-	-	1.2 (1.0)	19.9	25
											-	-	-	4.3	1.2 (1.0)	24.2	25
											EH*D-4M10	10.0	12.0	-	-	20.0	25
														4.3	-	25.4	30
														-	1.2 (1.0)	21.5	25
														4.3	1.2 (1.0)	26.9	30
											EH*D-4M15	15.0	18.0	-	-	27.6	30
														4.3	-	32.9	35
														-	1.2 (1.0)	29.1	30
														4.3	1.2 (1.0)	34.4	35
											EH*D-4M20	20.0	24.1	-	-	35.1	40
														4.3	-	40.4	45
														-	1.2 (1.0)	36.6	40
														4.3	1.2 (1.0)	41.9	45
											EH*D-4M30	30.0	36.1	-	-	50.1	60
														4.3	-	55.5	60
														-	1.2 (1.0)	51.6	60
														4.3	1.2 (1.0)	57.0	60
											EH*D-4M45	45.0	54.1	-	-	72.7	80
														4.3	-	78.0	80
														-	1.2 (1.0)	74.2	80
														4.3	1.2 (1.0)	79.5	80

Electrical Data

Model Number	Electrical Rating	Compressor			Outdoor Fan Motor			Indoor Fan Motor			Optional Electric Heat			Optional Powered Convienience Outlet	Optional Power Exhaust	Power Supply	
		QTY	RLA	LRA	QTY	HP	FLA	Type	HP	FLA	Part #	KW*	FLA	FLA	FLA	MCA	MOP
DHC0904L	460/3/60	2	5.8	55.1	2	0.33	0.85	1	2.4	5.4	-	-	-	-	-	20.1	25
											-	-	-	4.3	-	24.4	30
											-	-	-	-	1.2 (1.0)	21.3	25
											-	-	-	4.3	1.2 (1.0)	25.6	30
											EH*D-4M10	10.0	12.0	-	-	21.8	25
														4.3	-	27.2	30
														-	1.2 (1.0)	23.3	25
														4.3	1.2 (1.0)	28.7	30
											EH*D-4M15	15.0	18.0	-	-	29.3	30
														4.3	-	34.7	35
														-	1.2 (1.0)	30.8	35
														4.3	1.2 (1.0)	36.2	40
											EH*D-4M20	20.0	24.1	-	-	36.8	40
														4.3	-	42.2	45
														-	1.2 (1.0)	38.3	40
														4.3	1.2 (1.0)	43.7	45
											EH*D-4M30	30.0	36.1	-	-	51.9	60
														4.3	-	57.2	60
														-	1.2 (1.0)	53.4	60
														4.3	1.2 (1.0)	58.7	60
											EH*D-4M45	45.0	54.1	-	-	74.4	80
														4.3	-	79.8	80
														-	1.2 (1.0)	75.9	80
														4.3	1.2 (1.0)	81.3	90
DHC0904W	460/3/60	2	5.8	55.1	2	0.33	0.85	1	3.5	7.2	-	-	-	-	-	21.9	25
											-	-	-	4.3	-	26.2	30
											-	-	-	-	1.2 (1.0)	23.1	30
											-	-	-	4.3	1.2 (1.0)	27.4	30
											EH*D-4M10	10.0	12.0	-	-	24.0	25
														4.3	-	29.4	30
														-	1.2 (1.0)	25.5	30
														4.3	1.2 (1.0)	30.9	35
											EH*D-4M15	15.0	18.0	-	-	31.6	35
														4.3	-	36.9	40
														-	1.2 (1.0)	33.1	35
														4.3	1.2 (1.0)	38.4	40
											EH*D-4M20	20.0	24.1	-	-	39.1	40
														4.3	-	44.4	45
														-	1.2 (1.0)	40.6	45
														4.3	1.2 (1.0)	45.9	50
											EH*D-4M30	30.0	36.1	-	-	54.1	60
														4.3	-	59.5	60
														-	1.2 (1.0)	55.6	60
														4.3	1.2 (1.0)	61.0	70
											EH*D-4M45	45.0	54.1	-	-	76.7	80
														4.3	-	82.0	90
														-	1.2 (1.0)	78.2	80
														4.3	1.2 (1.0)	83.5	90

Electrical Data

Model Number	Electrical Rating	Compressor			Outdoor Fan Motor			Indoor Fan Motor			Optional Electric Heat			Optional Powered Convienience Outlet	Optional Power Exhaust	Power Supply	
		QTY	RLA	LRA	QTY	HP	FLA	Type	HP	FLA	Part #	KW*	FLA	FLA	FLA	MCA	MOP
DHC0907D	575/3/60	2	5.8	41.0	2	0.33	0.67	1	1.7	2.9	-	-	-	-	-	17.2	20
											-	-	-	3.5	-	20.7	25
											-	-	-	-	1.3	18.5	20
											-	-	-	3.5	1.3	22.0	25
											EH*D-7M10	10.0	9.6	-	-	17.2	20
														3.5	-	20.7	25
														-	1.3	18.5	20
														3.5	1.3	22.0	25
											EH*D-7M15	15.0	14.4	-	-	21.7	25
														3.5	-	26.0	30
														-	1.3	23.3	25
														3.5	1.3	27.7	30
											EH*D-7M20	20.0	19.2	-	-	27.7	30
														3.5	-	32.1	35
														-	1.3	29.3	30
														3.5	1.3	33.7	35
											EH*D-7M30	30.0	28.9	-	-	39.7	40
														3.5	-	44.1	45
														-	1.3	41.3	45
														3.5	1.3	45.7	50
											EH*D-7M45	45.0	43.3	-	-	57.8	60
														3.5	-	62.1	70
														-	1.3	59.4	60
														3.5	1.3	63.8	70
DHC0907L	575/3/60	2	5.8	41.0	2	0.33	0.67	1	2.4	4.0	-	-	-	-	-	18.3	20
											-	-	-	3.5	-	21.8	25
											-	-	-	-	1.3	19.6	25
											-	-	-	3.5	1.3	23.1	25
											EH*D-7M10	10.0	9.6	-	-	18.3	20
														3.5	-	21.8	25
														-	1.3	19.6	25
														3.5	1.3	23.1	25
											EH*D-7M15	15.0	14.4	-	-	23.0	25
														3.5	-	27.4	30
														-	1.3	24.7	25
														3.5	1.3	29.0	30
											EH*D-7M20	20.0	19.2	-	-	29.1	30
														3.5	-	33.4	35
														-	1.3	30.7	35
														3.5	1.3	35.1	40
											EH*D-7M30	30.0	28.9	-	-	41.1	45
														3.5	-	45.5	50
														-	1.3	42.7	45
														3.5	1.3	47.1	50
											EH*D-7M45	45.0	43.3	-	-	59.1	60
														3.5	-	63.5	70
														-	1.3	60.8	70
														3.5	1.3	65.1	70

Electrical Data

Model Number	Electrical Rating	Compressor			Outdoor Fan Motor			Indoor Fan Motor			Optional Electric Heat			Optional Powered Convienience Outlet	Optional Power Exhaust	Power Supply	
		QTY	RLA	LRA	QTY	HP	FLA	Type	HP	FLA	Part #	KW*	FLA	FLA	FLA	MCA	MOP
DHC0907W	575/3/60	2	5.8	41.0	2	0.33	0.67	1	3.5	5.0	-	-	-	-	-	19.3	25
											-	-	-	3.5	-	22.8	25
											-	-	-	-	1.3	20.6	25
											-	-	-	3.5	1.3	24.1	25
											EH*D-7M10	10.0	9.6	-	-	19.3	25
														3.5	-	22.8	25
														-	1.3	20.6	25
														3.5	1.3	24.3	25
											EH*D-7M15	15.0	14.4	-	-	24.3	25
														3.5	-	28.7	30
														-	1.3	25.9	30
														3.5	1.3	30.3	35
											EH*D-7M20	20.0	19.2	-	-	30.3	35
														3.5	-	34.7	35
														-	1.3	31.9	35
														3.5	1.3	36.3	40
											EH*D-7M30	30.0	28.9	-	-	42.3	45
														3.5	-	46.7	50
														-	1.3	44.0	45
														3.5	1.3	48.3	50
											EH*D-7M45	45.0	43.3	-	-	60.4	70
														3.5	-	64.8	70
														-	1.3	62.0	70
														3.5	1.3	66.4	70
DHC1023D	208/230/3/60	2	14.1	120	2	0.33	2.0	1	2.4	8.0	-	-	-	-	-	43.7/43.7	50/50
											-	-	-	9.6/8.7	-	53.3/52.4	60/60
											-	-	-	-	3.3/3.0 (2.4)	47.0/46.7	60/60
											-	-	-	9.6/8.7	3.3/3.0 (2.4)	56.6/55.4	60/60
											EH*D-3M10	7.5/10.0	20.8/24.1	-	-	43.7/43.7	50/50
														9.6/8.7	-	53.3/52.4	60/60
														-	3.3/3.0 (2.4)	47.0/46.7	60/60
														9.6/8.7	3.3/3.0 (2.4)	56.6/55.4	60/60
											EH*D-3M15	11.3/15.0	31.3/36.1	-	-	49.1/55.1	50/60
														9.6/8.7	-	61.1/66.0	70/70
														-	3.3/3.0 (2.4)	53.2/58.9	60/60
														9.6/8.7	3.3/3.0 (2.4)	65.2/69.7	70/70
											EH*D-3M20	15.0/20.0	41.7/48.1	-	-	62.1/70.1	70/80
														9.6/8.7	-	74.1/81.0	80/90
														-	3.3/3.0 (2.4)	66.3/73.9	70/80
														9.6/8.7	3.3/3.0 (2.4)	78.3/84.8	80/90
											EH*D-3M30	22.5/30.0	62.5/72.2	-	-	88.2/100	90/110
														9.6/8.7	-	100/111	110/125
														-	3.3/3.0 (2.4)	92.3/104	100/110
														9.6/8.7	3.3/3.0 (2.4)	104/115	110/125
											EH*D-3M45	33.8/45.0	93.8/108	-	-	127/145	150/150
														9.6/8.7	-	139/156	150/175
														-	3.3/3.0 (2.4)	131/149	150/150
														9.6/8.7	3.3/3.0 (2.4)	143/160	150/175

Electrical Data

Model Number	Electrical Rating	Compressor			Outdoor Fan Motor			Indoor Fan Motor			Optional Electric Heat			Optional Powered Convienience Outlet	Optional Power Exhaust	Power Supply	
		QTY	RLA	LRA	QTY	HP	FLA	Type	HP	FLA	Part #	KW*	FLA	FLA	FLA	MCA	MOP
DHC1023L	208/230/3/60	2	14.1	120	2	0.33	2.0	1	2.4	8.0	-	-	-	-	-	43.7/43.7	50/50
											-	-	-	9.6/8.7	-	53.3/52.4	60/60
											-	-	-	-	3.3/3.0 (2.4)	47.0/46.7	60/60
											-	-	-	9.6/8.7	3.3/3.0 (2.4)	56.6/55.4	60/60
											EH*D-3M10	7.5/10.0	20.8/24.1	-	-	43.7/43.7	50/50
														9.6/8.7	-	53.3/52.4	60/60
														-	3.3/3.0 (2.4)	47.0/46.7	60/60
														9.6/8.7	3.3/3.0 (2.4)	56.6/55.4	60/60
											EH*D-3M15	11.3/15.0	31.3/36.1	-	-	49.1/55.1	50/60
														9.6/8.7	-	61.1/66.0	70/70
														-	3.3/3.0 (2.4)	53.2/58.9	60/60
														9.6/8.7	3.3/3.0 (2.4)	65.2/69.7	70/70
											EH*D-3M20	15.0/20.0	41.7/48.1	-	-	62.1/70.1	70/80
														9.6/8.7	-	74.1/81.0	80/90
														-	3.3/3.0 (2.4)	66.3/73.9	70/80
														9.6/8.7	3.3/3.0 (2.4)	78.3/84.8	80/90
											EH*D-3M30	22.5/30.0	62.5/72.2	-	-	88.2/100	90/110
														9.6/8.7	-	100/111	110/125
														-	3.3/3.0 (2.4)	92.3/104	100/110
														9.6/8.7	3.3/3.0 (2.4)	104/115	110/125
											EH*D-3M45	33.8/45.0	93.8/108	-	-	127/145	150/150
														9.6/8.7	-	139/156	150/175
														-	3.3/3.0 (2.4)	131/149	150/150
														9.6/8.7	3.3/3.0 (2.4)	143/160	150/175
DHC1023W	208/230/3/60	2	14.1	120	2	0.33	2.0	1	3.5	10.9	-	-	-	-	-	46.6/46.6	60/60
											-	-	-	9.6/8.7	-	56.2/55.3	70/60
											-	-	-	-	3.3/3.0 (2.4)	49.9/49.6	60/60
											-	-	-	9.6/8.7	3.3/3.0 (2.4)	59.5/58.3	70/70
											EH*D-3M10	7.5/10.0	20.8/24.1	-	-	46.6/46.6	60/60
														9.6/8.7	-	56.2/55.3	70/60
														-	3.3/3.0 (2.4)	49.9/49.6	60/60
														9.6/8.7	3.3/3.0 (2.4)	59.5/58.3	70/70
											EH*D-3M15	11.3/15.0	31.3/36.1	-	-	52.7/58.7	60/60
														9.6/8.7	-	64.7/69.6	70/70
														-	3.3/3.0 (2.4)	56.9/62.5	60/70
														9.6/8.7	3.3/3.0 (2.4)	68.9/73.4	70/80
											EH*D-3M20	15.0/20.0	41.7/48.1	-	-	65.7/73.8	70/80
														9.6/8.7	-	77.7/84.6	80/90
														-	3.3/3.0 (2.4)	69.9/77.5	70/80
														9.6/8.7	3.3/3.0 (2.4)	81.9/88.4	90/90
											EH*D-3M30	22.5/30.0	62.5/72.2	-	-	91.8/104	100/110
														9.6/8.7	-	104/115	110/125
														-	3.3/3.0 (2.4)	96.0/108	100/110
														9.6/8.7	3.3/3.0 (2.4)	108/118	110/125
											EH*D-3M45	33.8/45.0	93.8/108	-	-	131/149	150/150
														9.6/8.7	-	143/160	150/175
														-	3.3/3.0 (2.4)	135/153	150/175
														9.6/8.7	3.3/3.0 (2.4)	147/164	150/175

Electrical Data

Model Number	Electrical Rating	Compressor			Outdoor Fan Motor			Indoor Fan Motor			Optional Electric Heat			Optional Powered Convienience Outlet	Optional Power Exhaust	Power Supply	
		QTY	RLA	LRA	QTY	HP	FLA	Type	HP	FLA	Part #	KW*	FLA	FLA	FLA	MCA	MOP
DHC1024D	460/3/60	2	6.4	55.1	2	0.33	0.85	1	2.4	5.4	-	-	-	-	-	21.5	25
											-	-	-	4.3	-	25.8	30
											-	-	-	-	1.2 (1.0)	22.7	25
											-	-	-	4.3	1.2 (1.0)	27.0	30
											EH*D-4M10	10.0	12.0	-	-	21.8	25
														4.3	-	27.2	30
														-	1.2 (1.0)	23.3	25
														4.3	1.2 (1.0)	28.7	30
											EH*D-4M15	15.0	18.0	-	-	29.3	30
														4.3	-	34.7	35
														-	1.2 (1.0)	30.8	35
														4.3	1.2 (1.0)	36.2	40
											EH*D-4M20	20.0	24.1	-	-	36.8	40
														4.3	-	42.2	45
														-	1.2 (1.0)	38.3	40
														4.3	1.2 (1.0)	43.7	45
											EH*D-4M30	30.0	36.1	-	-	51.9	60
														4.3	-	57.2	60
														-	1.2 (1.0)	53.4	60
														4.3	1.2 (1.0)	58.7	60
											EH*D-4M45	45.0	54.1	-	-	74.4	80
														4.3	-	79.8	80
														-	1.2 (1.0)	75.9	80
														4.3	1.2 (1.0)	81.3	90
DHC1024L	460/3/60	2	6.4	55.1	2	0.33	0.85	1	2.4	5.4	-	-	-	-	-	21.5	25
											-	-	-	4.3	-	25.8	30
											-	-	-	-	1.2 (1.0)	22.7	25
											-	-	-	4.3	1.2 (1.0)	27.0	30
											EH*D-4M10	10.0	12.0	-	-	21.8	25
														4.3	-	27.2	30
														-	1.2 (1.0)	23.3	25
														4.3	1.2 (1.0)	28.7	30
											EH*D-4M15	15.0	18.0	-	-	29.3	30
														4.3	-	34.7	35
														-	1.2 (1.0)	30.8	35
														4.3	1.2 (1.0)	36.2	40
											EH*D-4M20	20.0	24.1	-	-	36.8	40
														4.3	-	42.2	45
														-	1.2 (1.0)	38.3	40
														4.3	1.2 (1.0)	43.7	45
											EH*D-4M30	30.0	36.1	-	-	51.9	60
														4.3	-	57.2	60
														-	1.2 (1.0)	53.4	60
														4.3	1.2 (1.0)	58.7	60
											EH*D-4M45	45.0	54.1	-	-	74.4	80
														4.3	-	79.8	80
														-	1.2 (1.0)	75.9	80
														4.3	1.2 (1.0)	81.3	90

Electrical Data

Model Number	Electrical Rating	Compressor			Outdoor Fan Motor			Indoor Fan Motor			Optional Electric Heat			Optional Powered Convienience Outlet	Optional Power Exhaust	Power Supply	
		QTY	RLA	LRA	QTY	HP	FLA	Type	HP	FLA	Part #	KW*	FLA	FLA	FLA	MCA	MOP
DHC1024W	460/3/60	2	6.4	55.1	2	0.33	0.9	1	3.5	7.2	-	-	-	-	-	23.3	30
											-	-	-	4.3	-	27.6	35
											-	-	-	-	1.2 (1.0)	24.5	30
											-	-	-	4.3	1.2 (1.0)	28.8	35
											EH*D-4M10	10.0	12.0	-	-	24.0	30
														4.3	-	29.4	35
														-	1.2 (1.0)	25.5	30
														4.3	1.2 (1.0)	30.9	35
											EH*D-4M15	15.0	18.0	-	-	31.6	35
														4.3	-	36.9	40
														-	1.2 (1.0)	33.1	35
														4.3	1.2 (1.0)	38.4	40
											EH*D-4M20	20.0	24.1	-	-	39.1	40
														4.3	-	44.4	45
														-	1.2 (1.0)	40.6	45
														4.3	1.2 (1.0)	45.9	50
											EH*D-4M30	30.0	36.1	-	-	54.1	60
														4.3	-	59.5	60
														-	1.2 (1.0)	55.6	60
														4.3	1.2 (1.0)	61.0	70
											EH*D-4M45	45.0	54.1	-	-	76.7	80
														4.3	-	82.0	90
														-	1.2 (1.0)	78.2	80
														4.3	1.2 (1.0)	83.5	90
DHC1027D	575/3/60	2	5.1	41.0	2	0.33	0.67	1	2.4	4.0	-	-	-	-	-	16.9	20
											-	-	-	3.5	-	20.4	25
											-	-	-	-	1.3	18.2	20
											-	-	-	3.5	1.3	21.7	25
											EH*D-7M10	10.0	9.6	-	-	17.0	20
														3.5	-	21.4	25
														-	1.3	18.7	20
														3.5	1.3	23.0	25
											EH*D-7M15	15.0	14.4	-	-	23.0	25
														3.5	-	27.4	30
														-	1.3	24.7	25
														3.5	1.3	29.0	30
											EH*D-7M20	20.0	19.2	-	-	29.1	30
														3.5	-	33.4	35
														-	1.3	30.7	35
														3.5	1.3	35.1	40
											EH*D-7M30	30.0	28.9	-	-	41.1	45
														3.5	-	45.5	50
														-	1.3	42.7	45
														3.5	1.3	47.1	50
											EH*D-7M45	45.0	43.3	-	-	59.1	60
														3.5	-	63.5	70
														-	1.3	60.8	70
														3.5	1.3	65.1	70

Electrical Data

Model Number	Electrical Rating	Compressor			Outdoor Fan Motor			Indoor Fan Motor			Optional Electric Heat			Optional Powered Convienience Outlet	Optional Power Exhaust	Power Supply	
		QTY	RLA	LRA	QTY	HP	FLA	Type	HP	FLA	Part #	KW*	FLA	FLA	FLA	MCA	MOP
DHC1027L	575/3/60	2	5.1	41.0	2	0.33	0.67	1	2.4	4.0	-	-	-	-	-	16.9	20
											-	-	-	3.5	-	20.4	25
											-	-	-	-	1.3	18.2	20
											-	-	-	3.5	1.3	21.7	25
											EH*D-7M10	10.0	9.6	-	-	17.0	20
														3.5	-	21.4	25
														-	1.3	18.7	20
														3.5	1.3	23.0	25
											EH*D-7M15	15.0	14.4	-	-	23.0	25
														3.5	-	27.4	30
														-	1.3	24.7	25
														3.5	1.3	29.0	30
											EH*D-7M20	20.0	19.2	-	-	29.1	30
														3.5	-	33.4	35
														-	1.3	30.7	35
														3.5	1.3	35.1	40
											EH*D-7M30	30.0	28.9	-	-	41.1	45
														3.5	-	45.5	50
														-	1.3	42.7	45
														3.5	1.3	47.1	50
											EH*D-7M45	45.0	43.3	-	-	59.1	60
														3.5	-	63.5	70
														-	1.3	60.8	70
														3.5	1.3	65.1	70
DHC1027W	575/3/60	2	5.1	41.0	2	0.33	0.67	1	3.5	5.0	-	-	-	-	-	17.9	20
											-	-	-	3.5	-	21.4	25
											-	-	-	-	1.3	19.2	20
											-	-	-	3.5	1.3	22.7	25
											EH*D-7M10	10.0	9.6	-	-	18.3	20
														3.5	-	22.7	25
														-	1.3	19.9	20
														3.5	1.3	24.3	25
											EH*D-7M15	15.0	14.4	-	-	24.3	25
														3.5	-	28.7	30
														-	1.3	25.9	30
														3.5	1.3	30.3	35
											EH*D-7M20	20.0	19.2	-	-	30.3	35
														3.5	-	34.7	35
														-	1.3	31.9	35
														3.5	1.3	36.3	40
											EH*D-7M30	30.0	28.9	-	-	42.3	45
														3.5	-	46.7	50
														-	1.3	44.0	45
														3.5	1.3	48.3	50
											EH*D-7M45	45.0	43.3	-	-	60.4	70
														3.5	-	64.8	70
														-	1.3	62.0	70
														3.5	1.3	66.4	70

Electrical Data

Model Number	Electrical Rating	Compressor			Outdoor Fan Motor			Indoor Fan Motor			Optional Electric Heat			Optional Powered Convienience Outlet	Optional Power Exhaust	Power Supply	
		QTY	RLA	LRA	QTY	HP	FLA	Type	HP	FLA	Part #	KW*	FLA	FLA	FLA	MCA	MOP
DHC1203D	208/230/3/60	2	15.4	156	2	0.33	2.0	1	2.4	8.0	-	-	-	-	-	46.6/46.6	60/60
											-	-	-	9.6/8.7	-	56.2/55.3	70/70
											-	-	-	-	3.3/3.0 (2.4)	49.9/49.6	60/60
											-	-	-	9.6/8.7	3.3/3.0 (2.4)	59.5/58.3	70/70
											EH*D-3M10	7.5/10.0	20.8/24.1	-	-	46.6/46.6	60/60
														9.6/8.7	-	56.2/55.3	70/70
														-	3.3/3.0 (2.4)	49.9/49.6	60/60
														9.6/8.7	3.3/3.0 (2.4)	59.5/58.3	70/70
											EH*D-3M15	11.3/15.0	31.3/36.1	-	-	49.1/55.1	60/60
														9.6/8.7	-	61.1/66.0	70/70
														-	3.3/3.0 (2.4)	53.2/58.9	60/60
														9.6/8.7	3.3/3.0 (2.4)	65.2/69.7	70/70
											EH*D-3M20	15.0/20.0	41.7/48.1	-	-	62.1/70.1	70/80
														9.6/8.7	-	74.1/81.0	80/90
														-	3.3/3.0 (2.4)	66.3/73.9	70/80
														9.6/8.7	3.3/3.0 (2.4)	78.3/84.8	80/90
											EH*D-3M30	22.5/30.0	62.5/72.2	-	-	88.2/100	90/110
														9.6/8.7	-	100/111	110/125
														-	3.3/3.0 (2.4)	92.3/104	100/110
														9.6/8.7	3.3/3.0 (2.4)	104/115	110/125
											EH*D-3M45	33.8/45.0	93.8/108	-	-	127/145	150/150
														9.6/8.7	-	139/156	150/175
														-	3.3/3.0 (2.4)	131/149	150/150
														9.6/8.7	3.3/3.0 (2.4)	143/160	150/175
											EH*D-3M60	45.1/60.0	125/144	-	-	166/154	175/175
														9.6/8.7	-	178/165	200/175
														-	3.3/3.0 (2.4)	171/158	175/175
														9.6/8.7	3.3/3.0 (2.4)	183/169	200/175
DHC1203L	208/230/3/60	2	15.4	156	2	0.33	2.0	1	3.5	10.9	-	-	-	-	-	49.5/49.5	60/60
											-	-	-	9.6/8.7	-	59.1/58.2	70/70
											-	-	-	-	3.3/3.0 (2.4)	52.8/52.5	60/60
											-	-	-	9.6/8.7	3.3/3.0 (2.4)	62.4/61.2	70/70
											EH*D-3M10	7.5/10.0	20.8/24.1	-	-	49.5/49.5	60/60
														9.6/8.7	-	59.1/58.2	70/70
														-	3.3/3.0 (2.4)	52.8/52.5	60/60
														9.6/8.7	3.3/3.0 (2.4)	62.4/61.2	70/70
											EH*D-3M15	11.3/15.0	31.3/36.1	-	-	52.7/58.7	60/60
														9.6/8.7	-	64.7/69.6	70/70
														-	3.3/3.0 (2.4)	56.9/62.5	60/70
														9.6/8.7	3.3/3.0 (2.4)	68.9/73.4	70/80
											EH*D-3M20	15.0/20.0	41.7/48.1	-	-	65.7/73.8	70/80
														9.6/8.7	-	77.7/84.6	80/90
														-	3.3/3.0 (2.4)	69.9/77.5	70/80
														9.6/8.7	3.3/3.0 (2.4)	81.9/88.4	90/90
											EH*D-3M30	22.5/30.0	62.5/72.2	-	-	91.8/104	100/110
														9.6/8.7	-	104/115	110/125
														-	3.3/3.0 (2.4)	96.0/108	100/110
														9.6/8.7	3.3/3.0 (2.4)	108/118	110/125
											EH*D-3M45	33.8/45.0	93.8/108	-	-	131/149	150/150
														9.6/8.7	-	143/160	150/175
														-	3.3/3.0 (2.4)	135/153	150/175
														9.6/8.7	3.3/3.0 (2.4)	147/164	150/175
											EH*D-3M60	45.1/60.0	125/144	-	-	170/158	175/175
														9.6/8.7	-	182/169	200/200
														-	3.3/3.0 (2.4)	174/162	175/175
														9.6/8.7	3.3/3.0 (2.4)	186/173	200/200

Electrical Data

Model Number	Electrical Rating	Compressor			Outdoor Fan Motor			Indoor Fan Motor			Optional Electric Heat			Optional Powered Convienience Outlet	Optional Power Exhaust	Power Supply	
		QTY	RLA	LRA	QTY	HP	FLA	Type	HP	FLA	Part #	KW*	FLA	FLA	FLA	MCA	MOP
DHC1203W	208/230/3/60	2	15.4	156	2	0.33	2.0	1	3.5	10.9	-	-	-	-	-	49.5/49.5	60/60
											-	-	-	9.6/8.7	-	59.1/58.2	70/70
											-	-	-	-	3.3/3.0 (2.4)	52.8/52.5	60/60
											-	-	-	9.6/8.7	3.3/3.0 (2.4)	62.4/61.2	70/70
											EH*D-3M10	7.5/10.0	20.8/24.1	-	-	49.5/49.5	60/60
														9.6/8.7	-	59.1/58.2	70/70
														-	3.3/3.0 (2.4)	52.8/52.5	60/60
														9.6/8.7	3.3/3.0 (2.4)	62.4/61.2	70/70
											EH*D-3M15	11.3/15.0	31.3/36.1	-	-	52.7/58.7	60/60
														9.6/8.7	-	64.7/69.6	70/70
														-	3.3/3.0 (2.4)	56.9/62.5	60/70
														9.6/8.7	3.3/3.0 (2.4)	68.9/73.4	70/80
											EH*D-3M20	15.0/20.0	41.7/48.1	-	-	65.7/73.8	70/80
														9.6/8.7	-	77.7/84.6	80/90
														-	3.3/3.0 (2.4)	69.9/77.5	70/80
														9.6/8.7	3.3/3.0 (2.4)	81.9/88.4	90/90
											EH*D-3M30	22.5/30.0	62.5/72.2	-	-	91.8/104	100/110
														9.6/8.7	-	104/115	110/125
														-	3.3/3.0 (2.4)	96.0/108	100/110
														9.6/8.7	3.3/3.0 (2.4)	108/118	110/125
											EH*D-3M45	33.8/45.0	93.8/108	-	-	131/149	150/150
														9.6/8.7	-	143/160	150/175
														-	3.3/3.0 (2.4)	135/153	150/175
														9.6/8.7	3.3/3.0 (2.4)	147/164	150/175
											EH*D-3M60	45.1/60.0	125/144	-	-	170/158	175/175
														9.6/8.7	-	182/169	200/200
														-	3.3/3.0 (2.4)	174/162	175/175
														9.6/8.7	3.3/3.0 (2.4)	186/173	200/200
DHC1204D	460/3/60	2	7.7	69.0	2	0.33	0.85	1	2.4	5.4	-	-	-	-	-	24.4	30
											-	-	-	4.3	-	28.7	35
											-	-	-	-	1.2 (1.0)	25.6	30
											-	-	-	4.3	1.2 (1.0)	29.9	35
											EH*D-4M10	10.0	12.0	-	-	24.4	30
														4.3	-	28.7	35
														-	1.2 (1.0)	25.6	30
														4.3	1.2 (1.0)	29.9	35
											EH*D-4M15	15.0	18.0	-	-	29.3	30
														4.3	-	34.7	35
														-	1.2 (1.0)	30.8	35
														4.3	1.2 (1.0)	36.2	40
											EH*D-4M20	20.0	24.1	-	-	36.8	40
														4.3	-	42.2	45
														-	1.2 (1.0)	38.3	40
														4.3	1.2 (1.0)	43.7	45
											EH*D-4M30	30.0	36.1	-	-	51.9	60
														4.3	-	57.2	60
														-	1.2 (1.0)	53.4	60
														4.3	1.2 (1.0)	58.7	60
											EH*D-4M45	45.0	54.1	-	-	74.4	80
														4.3	-	79.8	80
														-	1.2 (1.0)	75.9	80
														4.3	1.2 (1.0)	81.3	90
											EH*D-4M60	60.0	72.2	-	-	78.9	90
														4.3	-	84.3	90
														-	1.2 (1.0)	80.4	90
														4.3	1.2 (1.0)	85.8	90

Electrical Data

Model Number	Electrical Rating	Compressor			Outdoor Fan Motor			Indoor Fan Motor			Optional Electric Heat			Optional Powered Convienience Outlet	Optional Power Exhaust	Power Supply	
		QTY	RLA	LRA	QTY	HP	FLA	Type	HP	FLA	Part #	KW*	FLA	FLA	FLA	MCA	MOP
DHC1204L	460/3/60	2	7.7	69.0	2	0.33	0.85	1	3.5	7.2	-	-	-	-	-	26.2	30
											-	-	-	4.3	-	30.5	35
											-	-	-	-	1.2 (1.0)	27.4	30
											-	-	-	4.3	1.2 (1.0)	31.7	35
											EH*D-4M10	10.0	12.0	-	-	26.2	30
														4.3	-	30.5	35
														-	1.2 (1.0)	27.4	30
														4.3	1.2 (1.0)	31.7	35
											EH*D-4M15	15.0	18.0	-	-	31.6	35
														4.3	-	36.9	40
														-	1.2 (1.0)	33.1	35
														4.3	1.2 (1.0)	38.4	40
											EH*D-4M20	20.0	24.1	-	-	39.1	40
														4.3	-	44.4	45
														-	1.2 (1.0)	40.6	45
														4.3	1.2 (1.0)	45.9	50
											EH*D-4M30	30.0	36.1	-	-	54.1	60
														4.3	-	59.5	60
														-	1.2 (1.0)	55.6	60
														4.3	1.2 (1.0)	61.0	70
											EH*D-4M45	45.0	54.1	-	-	76.7	80
														4.3	-	82.0	90
														-	1.2 (1.0)	78.2	80
														4.3	1.2 (1.0)	83.5	90
											EH*D-4M60	60.0	72.2	-	-	81.2	90
														4.3	-	86.5	100
														-	1.2 (1.0)	82.7	90
														4.3	1.2 (1.0)	88.0	100
DHC1204W	460/3/60	2	7.7	69.0	2	0.33	0.85	1	3.5	7.2	-	-	-	-	-	26.2	30
											-	-	-	4.3	-	30.5	35
											-	-	-	-	1.2 (1.0)	27.4	30
											-	-	-	4.3	1.2 (1.0)	31.7	35
											EH*D-4M10	10.0	12.0	-	-	26.2	30
														4.3	-	30.5	35
														-	1.2 (1.0)	27.4	30
														4.3	1.2 (1.0)	31.7	35
											EH*D-4M15	15.0	18.0	-	-	31.6	35
														4.3	-	36.9	40
														-	1.2 (1.0)	33.1	35
														4.3	1.2 (1.0)	38.4	40
											EH*D-4M20	20.0	24.1	-	-	39.1	40
														4.3	-	44.4	45
														-	1.2 (1.0)	40.6	45
														4.3	1.2 (1.0)	45.9	50
											EH*D-4M30	30.0	36.1	-	-	54.1	60
														4.3	-	59.5	60
														-	1.2 (1.0)	55.6	60
														4.3	1.2 (1.0)	61.0	70
											EH*D-4M45	45.0	54.1	-	-	76.7	80
														4.3	-	82.0	90
														-	1.2 (1.0)	78.2	80
														4.3	1.2 (1.0)	83.5	90
											EH*D-4M60	60.0	72.2	-	-	81.2	90
														4.3	-	86.5	100
														-	1.2 (1.0)	82.7	90
														4.3	1.2 (1.0)	88.0	100

Electrical Data

Model Number	Electrical Rating	Compressor			Outdoor Fan Motor			Indoor Fan Motor			Optional Electric Heat			Optional Powered Convienience Outlet	Optional Power Exhaust	Power Supply	
		QTY	RLA	LRA	QTY	HP	FLA	Type	HP	FLA	Part #	KW*	FLA	FLA	FLA	MCA	MOP
DHC1207D	575/3/60	2	6.4	47.8	2	0.33	0.67	1	2.4	4.0	-	-	-	-	-	19.7	25
											-	-	-	3.5	-	23.2	25
											-	-	-	-	1.3	21.0	25
											-	-	-	3.5	1.3	24.5	30
											EH*D-7M10	10.0	9.6	-	-	19.7	25
														3.5	-	23.2	25
														-	1.3	21.0	25
														3.5	1.3	24.5	30
											EH*D-7M15	15.0	14.4	-	-	23.0	25
														3.5	-	27.4	30
														-	1.3	24.7	25
														3.5	1.3	29.0	30
											EH*D-7M20	20.0	19.2	-	-	29.1	30
														3.5	-	33.4	35
														-	1.3	30.7	35
														3.5	1.3	35.1	40
											EH*D-7M30	30.0	28.9	-	-	41.1	45
														3.5	-	45.5	50
														-	1.3	42.7	45
														3.5	1.3	47.1	50
											EH*D-7M45	45.0	43.3	-	-	59.1	60
														3.5	-	63.5	70
														-	1.3	60.8	70
														3.5	1.3	65.1	70
											EH*D-7M60	60.0	57.7	-	-	62.7	70
														3.5	-	67.1	80
														-	1.3	64.4	70
														3.5	1.3	68.7	80
DHC1207L	575/3/60	2	6.4	47.8	2	0.33	0.67	1	3.5	5.0	-	-	-	-	-	20.7	25
											-	-	-	3.5	-	24.2	30
											-	-	-	-	1.3	22.0	25
											-	-	-	3.5	1.3	25.5	30
											EH*D-7M10	10.0	9.6	-	-	20.7	25
														3.5	-	24.2	30
														-	1.3	22.0	25
														3.5	1.3	25.5	30
											EH*D-7M15	15.0	14.4	-	-	24.3	25
														3.5	-	28.7	30
														-	1.3	25.9	30
														3.5	1.3	30.3	35
											EH*D-7M20	20.0	19.2	-	-	30.3	35
														3.5	-	34.7	35
														-	1.3	31.9	35
														3.5	1.3	36.3	40
											EH*D-7M30	30.0	28.9	-	-	42.3	45
														3.5	-	46.7	50
														-	1.3	44.0	45
														3.5	1.3	48.3	50
											EH*D-7M45	45.0	43.3	-	-	60.4	70
														3.5	-	64.8	70
														-	1.3	62.0	70
														3.5	1.3	66.4	70
											EH*D-7M60	60.0	57.7	-	-	64.0	70
														3.5	-	68.4	80
														-	1.3	65.6	80
														3.5	1.3	70.0	80

Electrical Data

Model Number	Electrical Rating	Compressor			Outdoor Fan Motor			Indoor Fan Motor			Optional Electric Heat			Optional Powered Convienience Outlet	Optional Power Exhaust	Power Supply	
		QTY	RLA	LRA	QTY	HP	FLA	Type	HP	FLA	Part #	KW*	FLA	FLA	FLA	MCA	MOP
DHC1207W	575/3/60	2	6.4	47.8	2	0.33	0.67	1	3.5	5.0	-	-	-	-	-	20.7	25
											-	-	-	3.5	-	24.2	30
											-	-	-	-	1.3	22.0	25
											-	-	-	3.5	1.3	25.5	30
											EH*D-7M10	10.0	9.6	-	-	20.7	25
														3.5	-	24.2	30
														-	1.3	22.0	25
														3.5	1.3	25.5	30
											EH*D-7M15	15.0	14.4	-	-	24.3	25
														3.5	-	28.7	30
														-	1.3	25.9	30
														3.5	1.3	30.3	35
											EH*D-7M20	20.0	19.2	-	-	30.3	35
														3.5	-	34.7	35
														-	1.3	31.9	35
														3.5	1.3	36.3	40
											EH*D-7M30	30.0	28.9	-	-	42.3	45
														3.5	-	46.7	50
														-	1.3	44.0	45
														3.5	1.3	48.3	50
											EH*D-7M45	45.0	43.3	-	-	60.4	70
														3.5	-	64.8	70
														-	1.3	62.0	70
														3.5	1.3	66.4	70
											EH*D-7M60	60.0	57.7	-	-	64.0	70
														3.5	-	68.4	80
														-	1.3	65.6	80
														3.5	1.3	70.0	80
DHC1503D	208/230/3/60	2	19.2	157	2	0.33	3.5	1	3.5	10.9	-	-	-	-	-	61.1/61.1	80/80
											-	-	-	9.6/8.7	-	70.7/69.8	80/80
											-	-	-	-	3.3/3.0 (2.4)	64.4/64.1	80/80
											-	-	-	9.6/8.7	3.3/3.0 (2.4)	74.0/72.8	90/90
											EH*D-3M10	7.5/10.0	20.8/24.1	-	-	61.1/61.1	80/80
														9.6/8.7	-	70.7/69.8	80/80
														-	3.3/3.0 (2.4)	64.4/64.1	80/80
														9.6/8.7	3.3/3.0 (2.4)	74.0/72.8	90/90
											EH*D-3M15	11.3/15.0	31.3/36.1	-	-	61.1/61.1	80/80
														9.6/8.7	-	70.7/69.8	80/80
														-	3.3/3.0 (2.4)	64.4/64.1	80/80
														9.6/8.7	3.3/3.0 (2.4)	74.0/73.4	90/90
											EH*D-3M20	15.0/20.0	41.7/48.1	-	-	65.7/73.8	80/80
														9.6/8.7	-	77.7/84.6	80/90
														-	3.3/3.0 (2.4)	69.9/77.5	80/80
														9.6/8.7	3.3/3.0 (2.4)	81.9/88.4	90/90
											EH*D-3M30	22.5/30.0	62.5/72.2	-	-	91.8/104	100/110
														9.6/8.7	-	104/115	110/125
														-	3.3/3.0 (2.4)	96.0/108	100/110
														9.6/8.7	3.3/3.0 (2.4)	108/118	110/125
											EH*D-3M45	33.8/45.0	93.8/108	-	-	131/149	150/150
														9.6/8.7	-	143/160	150/175
														-	3.3/3.0 (2.4)	135/153	150/175
														9.6/8.7	3.3/3.0 (2.4)	147/164	150/175
											EH*D-3M60	45.1/60.0	125/144	-	-	170/158	175/175
														9.6/8.7	-	182/169	200/200
														-	3.3/3.0 (2.4)	174/162	175/175
														9.6/8.7	3.3/3.0 (2.4)	186/173	200/200

Electrical Data

Model Number	Electrical Rating	Compressor			Outdoor Fan Motor			Indoor Fan Motor			Optional Electric Heat			Optional Powered Convienience Outlet	Optional Power Exhaust	Power Supply	
		QTY	RLA	LRA	QTY	HP	FLA	Type	HP	FLA	Part #	KW*	FLA	FLA	FLA	MCA	MOP
DHC1503L	208/230/3/60	2	19.2	157	2	0.33	3.5	1	3.5	10.9	-	-	-	-	-	61.1/61.1	80/80
											-	-	-	9.6/8.7	-	70.7/69.8	80/80
											-	-	-	-	3.3/3.0 (2.4)	64.4/64.1	80/80
											-	-	-	9.6/8.7	3.3/3.0 (2.4)	74.0/72.8	90/90
											EH*D-3M10	7.5/10.0	20.8/24.1	-	-	61.1/61.1	80/80
														9.6/8.7	-	70.7/69.8	80/80
														-	3.3/3.0 (2.4)	64.4/64.1	80/80
														9.6/8.7	3.3/3.0 (2.4)	74.0/72.8	90/90
											EH*D-3M15	11.3/15.0	31.3/36.1	-	-	61.1/61.1	80/80
														9.6/8.7	-	70.7/69.8	80/80
														-	3.3/3.0 (2.4)	64.4/64.1	80/80
														9.6/8.7	3.3/3.0 (2.4)	74.0/73.4	90/90
											EH*D-3M20	15.0/20.0	41.7/48.1	-	-	65.7/73.8	80/80
														9.6/8.7	-	77.7/84.6	80/90
														-	3.3/3.0 (2.4)	69.9/77.5	80/80
														9.6/8.7	3.3/3.0 (2.4)	81.9/88.4	90/90
											EH*D-3M30	22.5/30.0	62.5/72.2	-	-	91.8/104	100/110
														9.6/8.7	-	104/115	110/125
														-	3.3/3.0 (2.4)	96.0/108	100/110
														9.6/8.7	3.3/3.0 (2.4)	108/118	110/125
											EH*D-3M45	33.8/45.0	93.8/108	-	-	131/149	150/150
														9.6/8.7	-	143/160	150/175
														-	3.3/3.0 (2.4)	135/153	150/175
														9.6/8.7	3.3/3.0 (2.4)	147/164	150/175
											EH*D-3M60	45.1/60.0	125/144	-	-	170/158	175/175
														9.6/8.7	-	182/169	200/200
														-	3.3/3.0 (2.4)	174/162	175/175
														9.6/8.7	3.3/3.0 (2.4)	186/173	200/200
DHC1503W	208/230/3/60	2	19.2	157	2	0.33	3.5	1	5.0	14.5	-	-	-	-	-	64.7/64.7	80/80
											-	-	-	9.6/8.7	-	74.3/73.4	90/90
											-	-	-	-	3.3/3.0 (2.4)	68.0/67.7	80/80
											-	-	-	9.6/8.7	3.3/3.0 (2.4)	77.6/76.4	90/90
											EH*D-3M10	7.5/10.0	20.8/24.1	-	-	64.7/64.7	80/80
														9.6/8.7	-	74.3/73.4	90/90
														-	3.3/3.0 (2.4)	68.0/67.7	80/80
														9.6/8.7	3.3/3.0 (2.4)	77.6/76.4	90/90
											EH*D-3M15	11.3/15.0	31.3/36.1	-	-	64.7/64.7	80/80
														9.6/8.7	-	74.3/74.1	90/90
														-	3.3/3.0 (2.4)	68.0/67.7	80/80
														9.6/8.7	3.3/3.0 (2.4)	77.6/77.9	90/90
											EH*D-3M20	15.0/20.0	41.7/48.1	-	-	70.2/78.3	80/80
														9.6/8.7	-	82.2/89.1	90/90
														-	3.3/3.0 (2.4)	74.4/82.0	80/90
														9.6/8.7	3.3/3.0 (2.4)	86.4/92.9	90/100
											EH*D-3M30	22.5/30.0	62.5/72.2	-	-	96.3/108	100/110
														9.6/8.7	-	108/119	110/125
														-	3.3/3.0 (2.4)	100/112	110/125
														9.6/8.7	3.3/3.0 (2.4)	112/123	125/125
											EH*D-3M45	33.8/45.0	93.8/108	-	-	135/153	150/175
														9.6/8.7	-	147/164	150/175
														-	3.3/3.0 (2.4)	140/157	150/175
														9.6/8.7	3.3/3.0 (2.4)	152/168	175/175
											EH*D-3M60	45.1/60.0	125/144	-	-	174/162	175/200
														9.6/8.7	-	186/173	200/200
														-	3.3/3.0 (2.4)	179/166	200/200
														9.6/8.7	3.3/3.0 (2.4)	191/177	200/200

Electrical Data

Model Number	Electrical Rating	Compressor			Outdoor Fan Motor			Indoor Fan Motor			Optional Electric Heat			Optional Powered Convienience Outlet	Optional Power Exhaust	Power Supply	
		QTY	RLA	LRA	QTY	HP	FLA	Type	HP	FLA	Part #	KW*	FLA	FLA	FLA	MCA	MOP
DHC1504D	460/3/60	2	9.0	74.8	2	0.33	1.6	1	3.5	7.2	-	-	-	-	-	30.6	35
											-	-	-	4.3	-	34.9	40
											-	-	-	-	1.2 (1.0)	31.8	40
											-	-	-	4.3	1.2 (1.0)	36.1	40
											EH*D-4M10	10.0	12.0	-	-	30.6	35
														4.3	-	34.9	40
														-	1.2 (1.0)	31.8	40
														4.3	1.2 (1.0)	36.1	40
											EH*D-4M15	15.0	18.0	-	-	31.6	35
														4.3	-	36.9	40
														-	1.2 (1.0)	33.1	40
														4.3	1.2 (1.0)	38.4	40
											EH*D-4M20	20.0	24.1	-	-	39.1	40
														4.3	-	44.4	45
														-	1.2 (1.0)	40.6	45
														4.3	1.2 (1.0)	45.9	50
											EH*D-4M30	30.0	36.1	-	-	54.1	60
														4.3	-	59.5	60
														-	1.2 (1.0)	55.6	60
														4.3	1.2 (1.0)	61.0	70
											EH*D-4M45	45.0	54.1	-	-	76.7	80
														4.3	-	82.0	90
														-	1.2 (1.0)	78.2	80
														4.3	1.2 (1.0)	83.5	90
											EH*D-4M60	60.0	72.2	-	-	81.2	90
														4.3	-	86.5	100
														-	1.2 (1.0)	82.7	90
														4.3	1.2 (1.0)	88.0	100
DHC1504L	460/3/60	2	9.0	74.8	2	0.33	1.6	1	3.5	7.2	-	-	-	-	-	30.6	35
											-	-	-	4.3	-	34.9	40
											-	-	-	-	1.2 (1.0)	31.8	40
											-	-	-	4.3	1.2 (1.0)	36.1	40
											EH*D-4M10	10.0	12.0	-	-	30.6	35
														4.3	-	34.9	40
														-	1.2 (1.0)	31.8	40
														4.3	1.2 (1.0)	36.1	40
											EH*D-4M15	15.0	18.0	-	-	31.6	35
														4.3	-	36.9	40
														-	1.2 (1.0)	33.1	40
														4.3	1.2 (1.0)	38.4	40
											EH*D-4M20	20.0	24.1	-	-	39.1	40
														4.3	-	44.4	45
														-	1.2 (1.0)	40.6	45
														4.3	1.2 (1.0)	45.9	50
											EH*D-4M30	30.0	36.1	-	-	54.1	60
														4.3	-	59.5	60
														-	1.2 (1.0)	55.6	60
														4.3	1.2 (1.0)	61.0	70
											EH*D-4M45	45.0	54.1	-	-	76.7	80
														4.3	-	82.0	90
														-	1.2 (1.0)	78.2	80
														4.3	1.2 (1.0)	83.5	90
											EH*D-4M60	60.0	72.2	-	-	81.2	90
														4.3	-	86.5	100
														-	1.2 (1.0)	82.7	90
														4.3	1.2 (1.0)	88.0	100

Electrical Data

Model Number	Electrical Rating	Compressor			Outdoor Fan Motor			Indoor Fan Motor			Optional Electric Heat			Optional Powered Convienience Outlet	Optional Power Exhaust	Power Supply	
		QTY	RLA	LRA	QTY	HP	FLA	Type	HP	FLA	Part #	KW*	FLA	FLA	FLA	MCA	MOP
DHC1504W	460/3/60	2	9.0	74.8	2	0.33	1.6	1	5.0	10.6	-	-	-	-	-	34.0	40
											-	-	-	4.3	-	38.3	45
											-	-	-	-	1.2 (1.0)	35.2	45
											-	-	-	4.3	1.2 (1.0)	39.5	50
											EH*D-4M10	10.0	12.0	-	-	34.0	40
														4.3	-	38.3	45
														-	1.2 (1.0)	35.2	45
														4.3	1.2 (1.0)	39.5	50
											EH*D-4M15	15.0	18.0	-	-	35.8	40
														4.3	-	41.2	45
														-	1.2 (1.0)	37.3	45
														4.3	1.2 (1.0)	42.7	50
											EH*D-4M20	20.0	24.1	-	-	43.3	45
														4.3	-	48.7	50
														-	1.2 (1.0)	44.8	45
														4.3	1.2 (1.0)	50.2	60
											EH*D-4M30	30.0	36.1	-	-	58.4	60
														4.3	-	63.7	70
														-	1.2 (1.0)	59.9	60
														4.3	1.2 (1.0)	65.2	70
											EH*D-4M45	45.0	54.1	-	-	80.9	90
														4.3	-	86.3	90
														-	1.2 (1.0)	82.4	90
														4.3	1.2 (1.0)	87.8	90
											EH*D-4M60	60.0	72.2	-	-	85.4	100
														4.3	-	90.8	100
														-	1.2 (1.0)	86.9	100
														4.3	1.2 (1.0)	92.3	100
DHC1507D	575/3/60	2	7.0	53.9	2	0.33	1.54	1	3.5	5.0	-	-	-	-	-	23.9	30
											-	-	-	3.5	-	27.4	30
											-	-	-	-	1.3	25.2	30
											-	-	-	3.5	1.3	28.7	35
											EH*D-7M10	10.0	9.6	-	-	23.9	30
														3.5	-	27.4	30
														-	1.3	25.2	30
														3.5	1.3	28.7	35
											EH*D-7M15	15.0	14.4	-	-	24.3	30
														3.5	-	28.7	30
														-	1.3	25.9	30
														3.5	1.3	30.3	35
											EH*D-7M20	20.0	19.2	-	-	30.3	35
														3.5	-	34.7	35
														-	1.3	31.9	35
														3.5	1.3	36.3	40
											EH*D-7M30	30.0	28.9	-	-	42.3	45
														3.5	-	46.7	50
														-	1.3	44.0	45
														3.5	1.3	48.3	50
											EH*D-7M45	45.0	43.3	-	-	60.4	70
														3.5	-	64.8	70
														-	1.3	62.0	70
														3.5	1.3	66.4	70
											EH*D-7M60	60.0	57.7	-	-	64.0	70
														3.5	-	68.4	80
														-	1.3	65.6	80
														3.5	1.3	70.0	80

Electrical Data

Model Number	Electrical Rating	Compressor			Outdoor Fan Motor			Indoor Fan Motor			Optional Electric Heat			Optional Powered Convienience Outlet	Optional Power Exhaust	Power Supply	
		QTY	RLA	LRA	QTY	HP	FLA	Type	HP	FLA	Part #	KW*	FLA	FLA	FLA	MCA	MOP
DHC1507L	575/3/60	2	7.0	53.9	2	0.33	1.54	1	3.5	5.0	-	-	-	-	-	23.9	30
											-	-	-	3.5	-	27.4	30
											-	-	-	-	1.3	25.2	30
											-	-	-	3.5	1.3	28.7	35
											EH*D-7M10	10.0	9.6	-	-	23.9	30
														3.5	-	27.4	30
														-	1.3	25.2	30
														3.5	1.3	28.7	35
											EH*D-7M15	15.0	14.4	-	-	24.3	30
														3.5	-	28.7	30
														-	1.3	25.9	30
														3.5	1.3	30.3	35
											EH*D-7M20	20.0	19.2	-	-	30.3	35
														3.5	-	34.7	35
														-	1.3	31.9	35
														3.5	1.3	36.3	40
											EH*D-7M30	30.0	28.9	-	-	42.3	45
														3.5	-	46.7	50
														-	1.3	44.0	45
														3.5	1.3	48.3	50
											EH*D-7M45	45.0	43.3	-	-	60.4	70
														3.5	-	64.8	70
														-	1.3	62.0	70
														3.5	1.3	66.4	70
											EH*D-7M60	60.0	57.7	-	-	64.0	70
														3.5	-	68.4	80
														-	1.3	65.6	80
														3.5	1.3	70.0	80
DHC1507W	575/3/60	2	7.0	53.9	2	0.33	1.5	1	5.0	7.2	-	-	-	-	-	26.1	30
											-	-	-	3.5	-	29.6	35
											-	-	-	-	1.3	27.4	30
											-	-	-	3.5	1.3	30.9	35
											EH*D-7M10	10.0	9.6	-	-	26.1	30
														3.5	-	29.6	35
														-	1.3	27.4	30
														3.5	1.3	30.9	35
											EH*D-7M15	15.0	14.4	-	-	27.0	30
														3.5	-	31.4	35
														-	1.3	28.7	30
														3.5	1.3	33.0	35
											EH*D-7M20	20.0	19.2	-	-	33.1	35
														3.5	-	37.4	40
														-	1.3	34.7	35
														3.5	1.3	39.1	40
											EH*D-7M30	30.0	28.9	-	-	45.1	50
														3.5	-	49.5	50
														-	1.3	46.7	50
														3.5	1.3	51.1	60
											EH*D-7M45	45.0	43.3	-	-	63.1	70
														3.5	-	67.5	70
														-	1.3	64.8	70
														3.5	1.3	69.1	70
											EH*D-7M60	60.0	57.7	-	-	66.7	80
														3.5	-	71.1	80
														-	1.3	68.4	80
														3.5	1.3	72.7	80

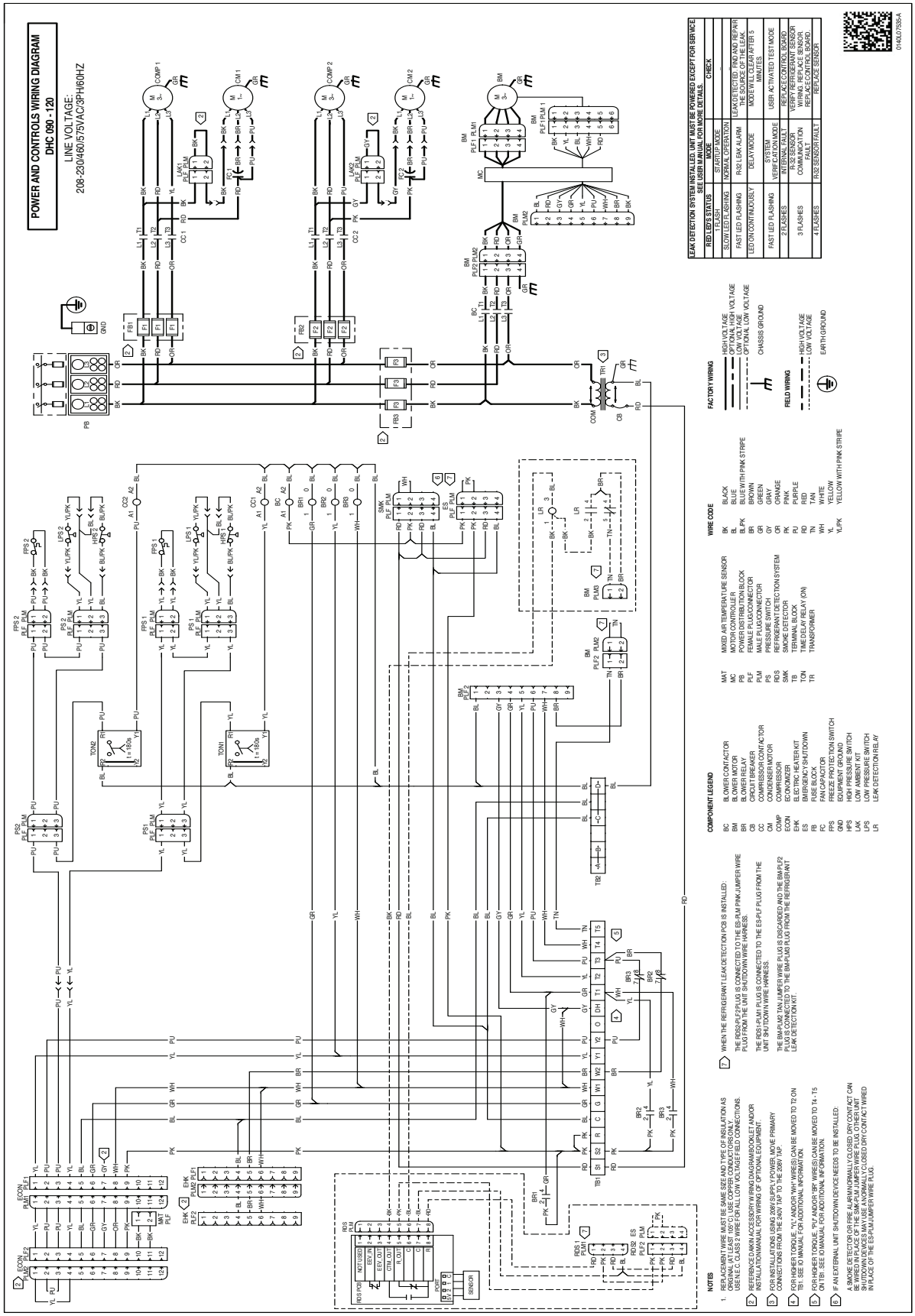

Wiring is subject to change. Always refer to the wiring diagram on the unit for the most up-to-date wiring.

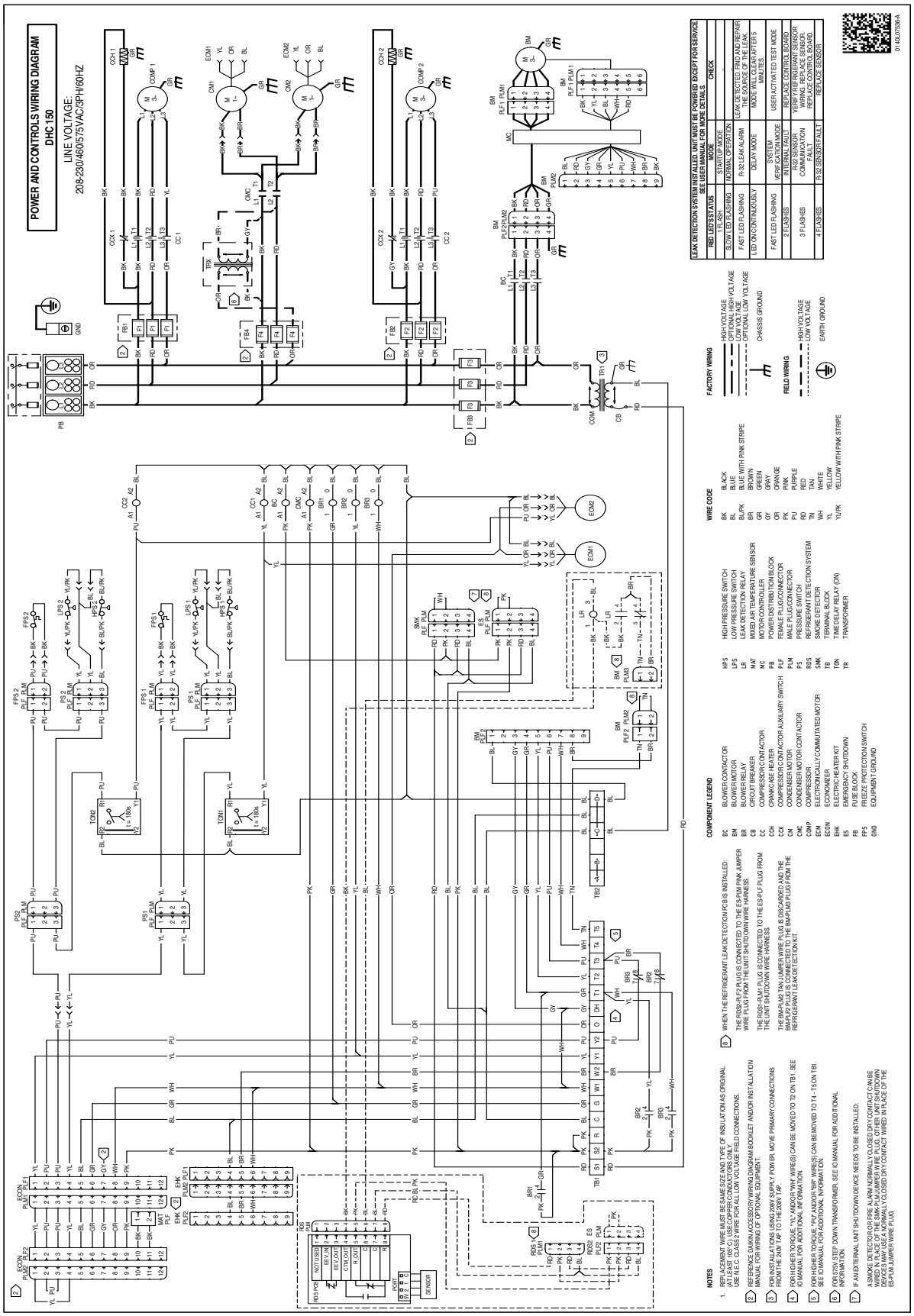

WARNING

High Voltage: Disconnect all power before servicing or installing this unit. Multiple power sources may be present. Failure to do so may cause property damage, personal injury, or death.

Wiring is subject to change. Always refer to the wiring diagram on the unit for the most up-to-date wiring.

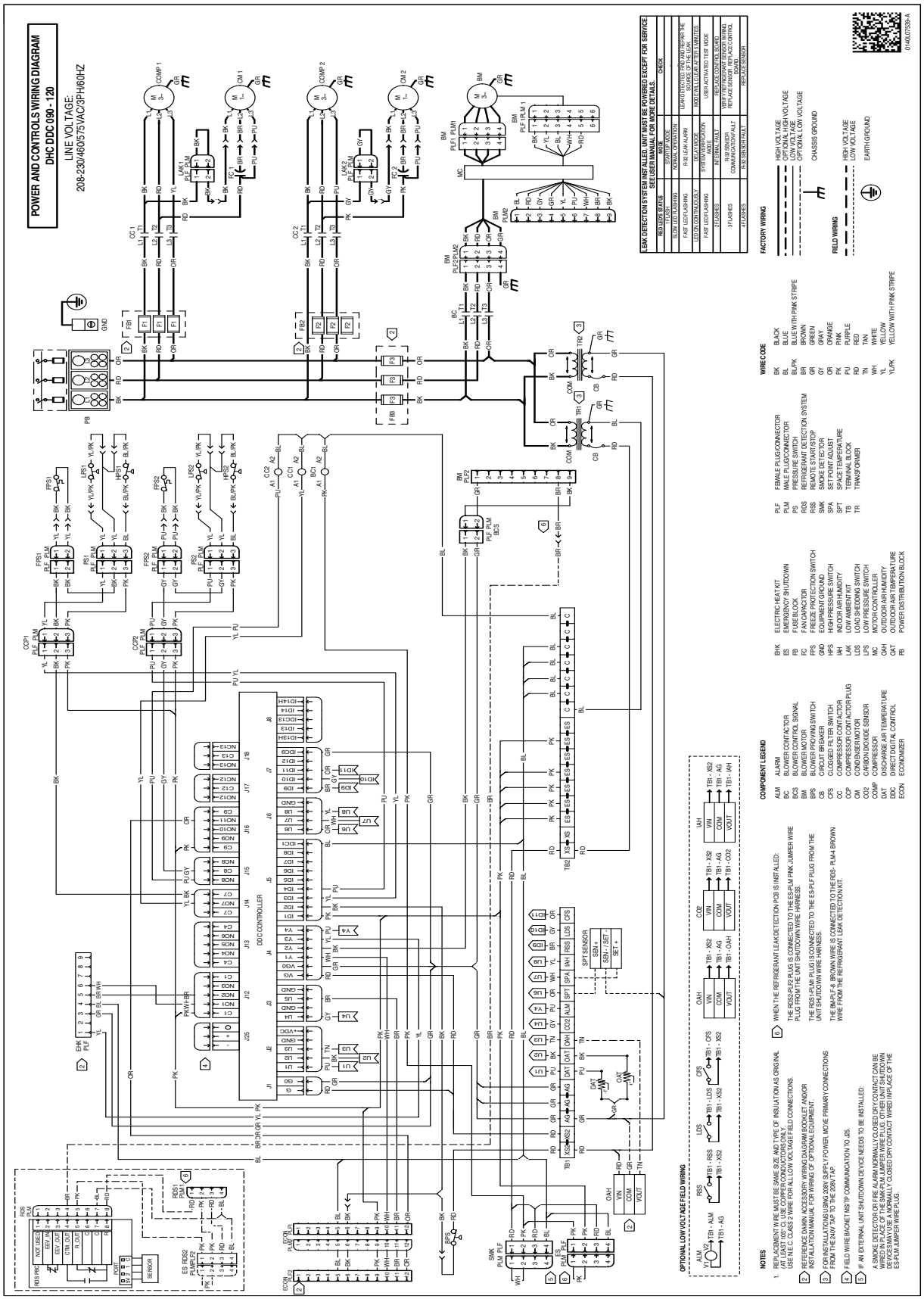

WARNING

High Voltage: Disconnect all power before servicing or installing this unit. Multiple power sources may be present. Failure to do so may cause property damage, personal injury, or death.

Wiring is subject to change. Always refer to the wiring diagram on the unit for the most up-to-date wiring.

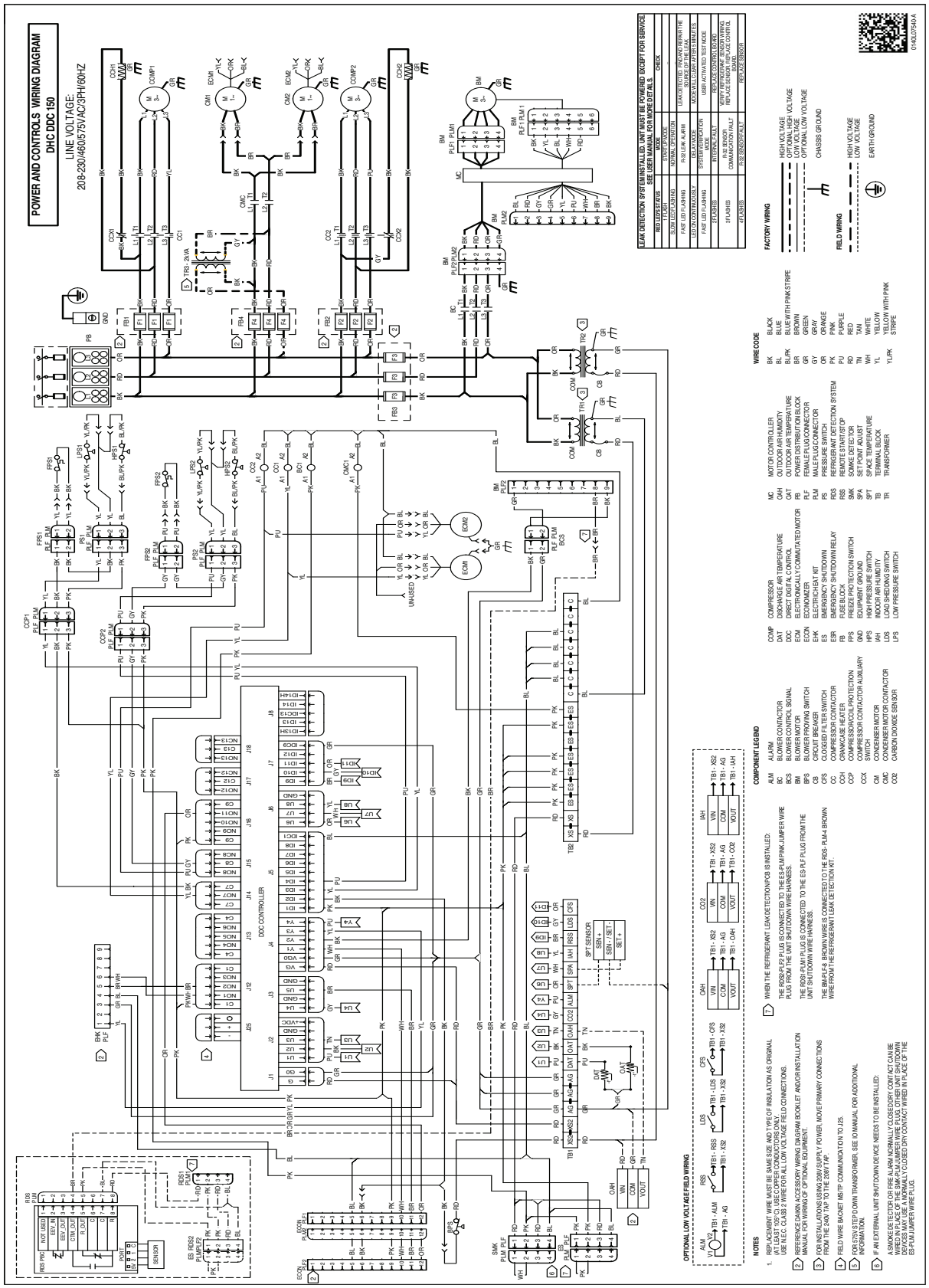
POWER AND CONTROLS WIRING DIAGRAM
DHC DDC 150
LINE VOLTAGE:
208-230/460/575VAC/3PH/60HZ
LEAK DETECTION SYSTEM INSTALLED. UNIT MUST BE POWERED EXCEPT FOR SERVICE.
SEE USER MANUAL FOR MORE DETAILS.
FACTORY WIRING
FIELD WIRING
WIRE CODE
COMPONENT LEGEND
NOTES
OPTIONAL LOW VOLTAGE FIELD WIRING
DDC CONTROLLER
SFT SENSOR
SEN SENSOR
ES RDS2 PLMP1-F2
RDS1 PLM
SAK PLM PLF
ECON PLMP
BPS
ECM1
ECM2
COMP1
COMP2
CCH1
CCH2
CCP1
CCP2
CCX1
CCX2
CC1
CC2
OMC
BM PLF1 PLM1
BM PLF1 PLM1
BM PLF2 PLM2
BM PLF2
MC
TR1
TR2
TB2
PB
FB1
FB2
FB3
FB4
FPS1
FPS2
FPS3
LPS1
LPS2
HPS1
HPS2
PS1
PS2
OAT
ALM
RSS
LDS
CFS
OAH
IAH
SEN SENSOR
RDS PRC
NOT USED
EEV IN
EEV OUT
C.TM. OUT
R. OUT
C
G
R
SEN SOR
ON/OFF
SW
RDS1
RDS2
ES RDS2
PLMP1-F2
ECON
PLMP
SAK
PLM PLF
BPS
ECM
EXM2
EXM1
UNA-USED
YL OR BL
PU OR BL
YL OR BL
YL OR BL
BM PLF2
BM PLF2
BM PLF1 PLM1
BM PLF1 PLM1
BM PLF2 PLM2
BM PLF2 PLM2
BCS
BCS
BM
BM
BPS
BPS
CB
CB
CFS
CFS
CC
CC
CCH
CCH
CCP
CCP
CCX
CCX
CM
CM
CMC
CMC
CO2
CO2
COMP
COMP
DAT
DAT
DDC
DDC
ECM
ECM
ECON
ECON
EEV
EEV
ES
ES
ESR
ESR
FB
FB
FPS
FPS
GND
GND
HPS
HPS
IAH
IAH
LDS
LDS
LPS
LPS
MC
MC
OAH
OAH
OMC
OMC
PS
PS
RGS
RGS
RSS
RSS
SAK
SAK
SPA
SPA
SFT
SFT
TB
TB
TR
TR
TB1 - ALM
TB1 - AG
TB1 - RSS
TB1 - XS2
TB1 - LDS
TB1 - XS2
TB1 - CFS
TB1 - XS2
TB1 - OAH
TB1 - AG
TB1 - XS2
TB1 - IAH
TB1 - AG
TB1 - CO2
VIN
COM
VOUT
SSN - SET -
SET +
SSN +
SFT SENSOR
CO2
OAH
IAH
OAT
ALM
RSS
LDS
CFS
OAT
OAT
GR
RD
BK
TN
PU
BK
GR
GR
RD
RD
RD

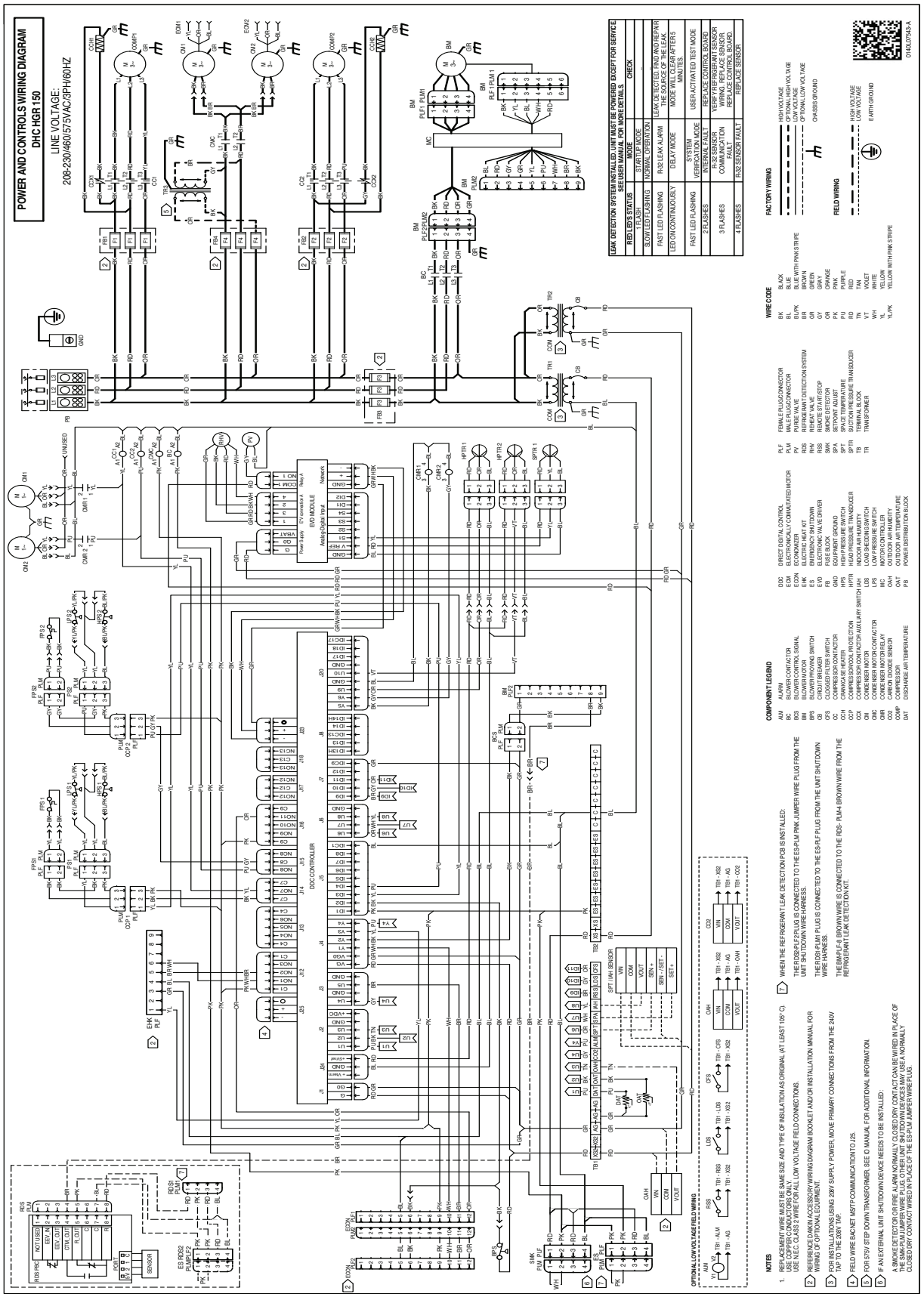

Wiring is subject to change. Always refer to the wiring diagram on the unit for the most up-to-date wiring.

WARNING

High Voltage: Disconnect all power before servicing or installing this unit. Multiple power sources may be present. Failure to do so may cause property damage, personal injury, or death.

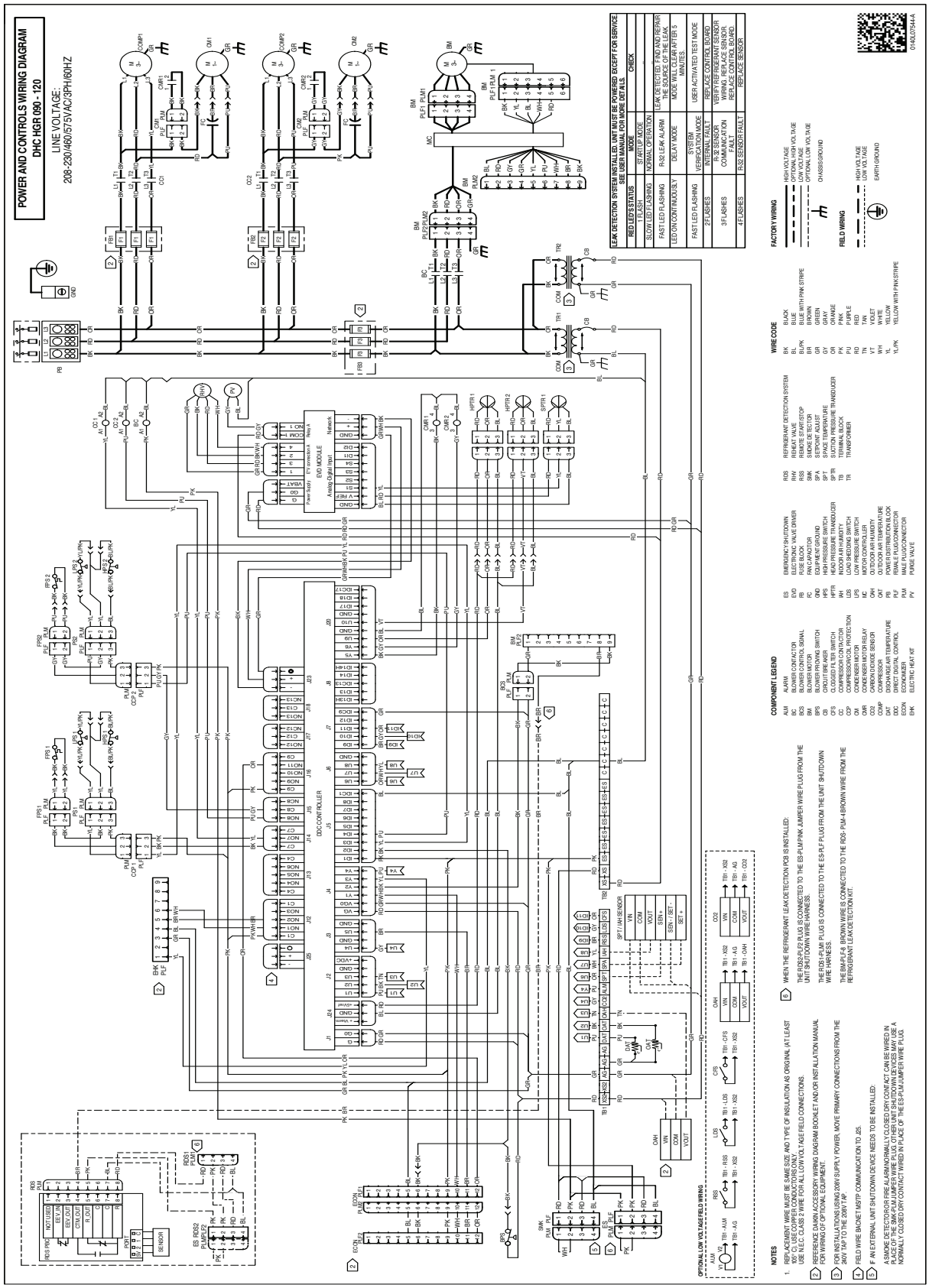
POWER AND CONTROLS WIRING DIAGRAM
DHC HGR 090 - 120
LINE VOLTAGE:
208-230/460/575VAC/3PH/60HZ
LEAK DETECTION SYSTEM INSTALLED. UNIT MUST BE POWERED EXCEPT FOR SERVICE
SEE USER MANUAL FOR MORE DETAILS
RED LED'S STATUS
MODE
CHECK
1 FLASH
STARTUP MODE
SLOW LED FLASHING
NORMAL OPERATION
FAST LED FLASHING
R-32 LEAK ALARM
LEAK DETECTED. FIND AND REPAIR LEAK. VENTILATE AREA. STANDBY MODE WILL CLEAR AFTER 15 MINUTES
LED ON CONTINUOUSLY
DELAY MODE
USER ACTIVATED TEST MODE
2 FLASHES
SYSTEM VERIFICATION MODE
REPLACE CONTROL BOARD
3 FLASHES
R-32 SENSOR COMMUNICATION FAULT
VERIFY REFRIGERANT SENSOR WIRING. REPLACE CONTROL BOARD
4 FLASHES
R-32 SENSOR FAULT
REPLACE SENSOR
FACTORY WIRING
HIGH VOLTAGE
LOW VOLTAGE
OPTIONAL LOW VOLTAGE
CHASSIS GROUND
FIELD WIRING
HIGH VOLTAGE
LOW VOLTAGE
EARTH GROUND
WIRE CODE
BK BLACK
BL BLUE
BLPK BLUE WITH PINK STRIPE
BR BROWN
GR GREEN
GY GRAY
OR ORANGE
PK PINK
PU PURPLE
RD RED
TN TAN
VT VIOLET
WH WHITE
YL YELLOW
YLPK YELLOW WITH PINK STRIPE
COMPONENT LEGEND
ALM ALARM
BCP BLOWER CONTACTOR
BCS BLOWER CONTROL SIGNAL
BM BLOWER MOTOR
BPS BLOWER PROVING SWITCH
CB CIRCUIT BREAKER
CFS CLOGGED FILTER SWITCH
CC COMPRESSOR CONTACTOR
CCP COMPRESSOR COIL PROTECTOR
CS CONDENSER SWITCH
CWR CONDENSER MOTOR RELAY
CO2 CARBON DIOXIDE SENSOR
COMP COMPRESSOR
CAT OUTDOOR AIR TEMPERATURE
DAT DISCHARGE AIR TEMPERATURE
DDC DIRECT DIGITAL CONTROL
ECON ECONOMIZER
EHK ELECTRIC HEAT KIT
ES EMERGENCY SHUTDOWN
EVD ELECTRONIC VALVE DRIVER
FB FUSE BLOCK
FC FAN CAPACITOR
GND EQUIPMENT GROUND
HPS HIGH PRESSURE SWITCH
HPTR HEAD PRESSURE TRANSDUCER
IAH INDOOR AIR HUMIDITY
LDS LOAD SHEDDING SWITCH
LPS LOW PRESSURE SWITCH
MC MOTOR CONTROLLER
OAH OUTDOOR AIR HUMIDITY
OAT OUTDOOR AIR TEMPERATURE
PLF PLUG FILTER
PLM MALE PLUG/CONNECTOR
PLF FEMALE PLUG/CONNECTOR
PV PURGE VALVE
RDS REFRIGERANT DETECTION SYSTEM
RIS REMOTE INPUT SIGNAL
RSS REMOTE START/STOP
SMK SMOKE DETECTOR
SP A SETPOINT ADJUST
SPT SPACE TEMPERATURE
SP PR SUCTION PRESSURE TRANSDUCER
TB TERMINAL BLOCK
TR TRANSFORMER
NOTES
1. REPLACEMENT WIRE MUST BE SAME SIZE AND TYPE OF INSULATION AS ORIGINAL (AT LEAST 105°C). REPLACEMENT WIRE MUST BE SHIELDED. USE N.E.C. CLASS 2 WIRE FOR ALL LOW VOLTAGE FIELD CONNECTIONS.
1. REFERENCE DAIKIN ACCESSORY WIRING DIAGRAM BOOKLET AND/OR INSTALLATION MANUAL FOR WIRING OF OPTIONAL EQUIPMENT.
1. FOR INSTALLATIONS USING 208V SUPPLY POWER, MOVE PRIMARY CONNECTIONS FROM THE 240V TAP TO THE 208V TAP.
1. FIELD WIRE BACNET MSTP COMMUNICATION TO J25.
1. IF AN EXTERNAL UNIT SHUTDOWN DEVICE NEEDS TO BE INSTALLED:
A SMOKE DETECTOR FOR FIRE ALARM NORMALLY CLOSED DRY CONTACT CAN BE WIRED IN PLACE OF THE SMK-PLM JUMPER WIRE PLUG. OTHER UNIT SHUTDOWN DEVICES MAY USE A NORMALLY CLOSED DRY CONTACT WIRED IN PLACE OF THE ES-PLM JUMPER WIRE PLUG.
1. WHEN THE REFRIGERANT LEAK DETECTION PCB IS INSTALLED:
THE RDS2-PLF2 PLUG IS CONNECTED TO THE ES-PLM PINK JUMPER WIRE PLUG FROM THE UNIT SHUTDOWN WIRE HARNESS.
THE RDS1-PLM PLUG IS CONNECTED TO THE ES-PLF PLUG FROM THE UNIT SHUTDOWN WIRE HARNESS.
THE BM-PLF-6 BROWN WIRE IS CONNECTED TO THE RDS-PLM-4 BROWN WIRE FROM THE REFRIGERANT LEAK DETECTION KIT.
OPTIONAL LOW VOLTAGE FIELD WIRING
ALM
TB1 - ALM
TB1 - AG
RSS
TB1 - RSS
TB1 - XS2
LDS
TB1 - LDS
TB1 - XS2
CFS
TB1 - CFS
TB1 - XS2
OAH
VIN
COM
VOUT
TB1 - OAH
TB1 - AG
CO2
VIN
COM
VOUT
TB1 - XS2
TB1 - AG
TB1 - CO2
SP T / IAH SENSOR
VIN
COM
VOUT
SEN +
SEN - / SET -
SET +
DAT
CAT
ECON
PLM PLF
ES
PLF PLM
SMK
PLM PLF
RDS1
PLM PLF
RDS2
PLF PLM
RIS
PLM
RDS PSC
NOT USED
EEV_VIN
EEV_OUT
CTR_OUT
R_OUT
PORT
SENSOR
ES RDS2
PLF PLM
J1
J2
J3
J4
J5
J6
J7
J8
J9
J13
J14
J15
J17
J18
J19
J20
J23
J24
J25
DDC CONTROLLER
EVD MODULE
Analog Digital Input
Network
Power Supply
EV connection
Peer A
CC 1
CC 2
BC
OAR
IAH
PV
HPTR 1
HPTR 2
SPTR 1
OAR 1
OAR 2
IPS 1
IPS 2
FPS 1
FPS 2
PLM PLF
PLF PLM
BM PLF 2
BM PLF 1
BM PLF2 PLM2
BM PLM2
BM PLF1 PLM 1
BM PLF1 PLM
BPS
PLF PLM
PLM PLF
SMK
PLM PLF
ECON
PLM PLF
ES
PLF PLM
COMP1
COMP2
CM1
CM2
OAR1
OAR2
CB1
CB2
CCP1
CCP2
FB1
FB2
FB3
MC
TR1
TR2
CB
COM
GND
EHK
PLF
01HAU0T344A

Electrical Connections

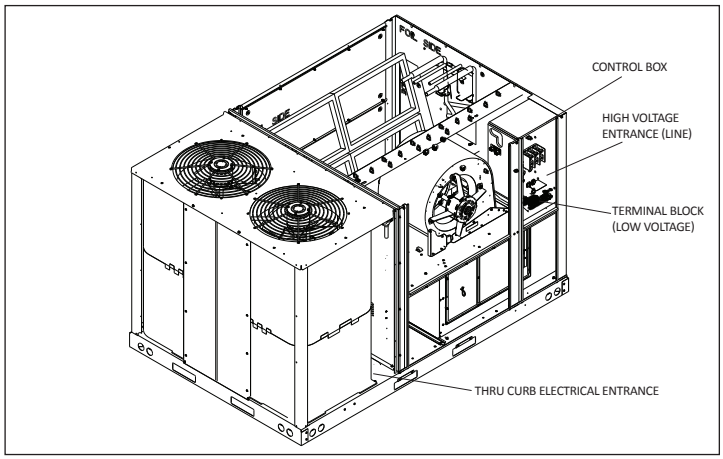

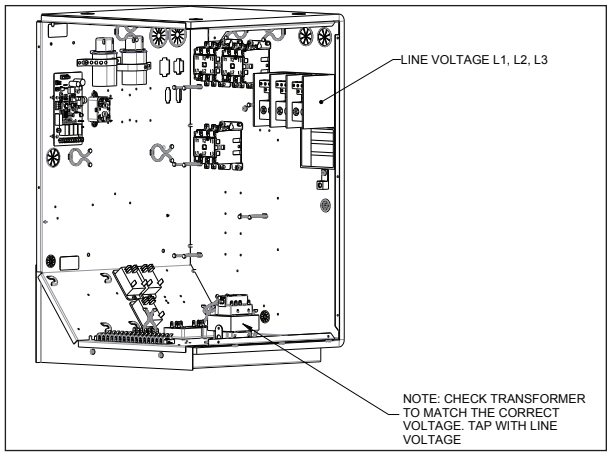

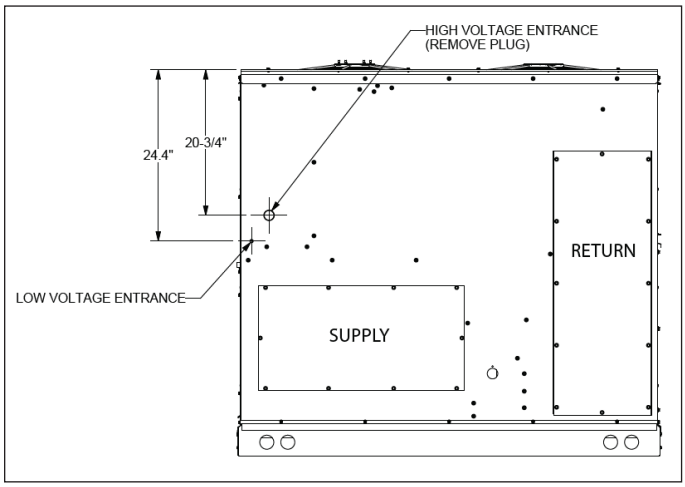

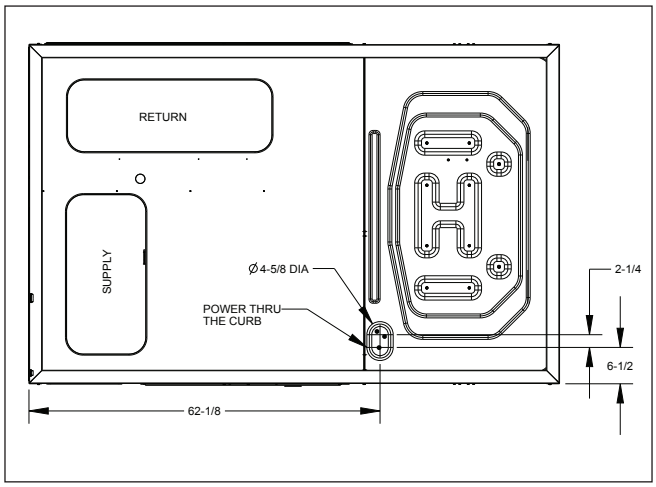

Unit Clearances

Service Clearance

Allow for recommended service clearances as shown in figure to the right. In situations that have multiple units, a 36" minimum clearance is required between the condenser coils. A clearance of 48" is recommended on all sides of the unit to allow service access and to ensure proper ventilation and condenser airflow. The top of the unit should be unobstructed. Provide a roof walkway along the sides of the unit for service and access to controls and components. Contact your Daikin sales representative for service requirements less than those recommended.

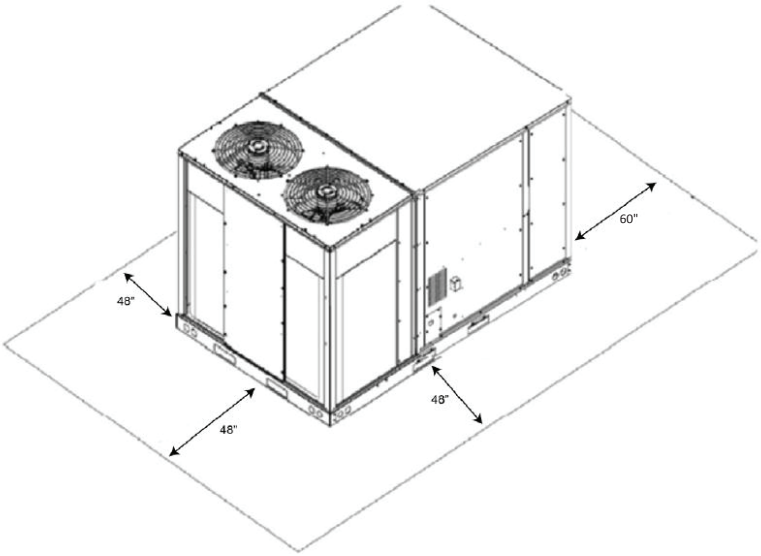

Unit Location

The structural engineer must verify that the roof has adequate support and ability to minimize deflection. Take extreme caution when using on a wooden roof structure. Unit condenser coils should be in a location that avoids any heated exhaust air.

Allow sufficient space around the unit for maintenance/service clearance. Consult your Daikin sales representative if available clearances do not meet minimum recommendations.

Where code considerations, such as the NEC, require extended clearances, these take precedence.

Provisions for forks have been included in the unit base frame. No other fork locations are approved.

» Unit must be lifted by the four lifting holes located at the base frame corners.

» Lifting cables should be attached to the unit with shackles.

» The distance between the crane hook and the top of the unit must not be less than 60".

» Two spreader bars must span over the unit to prevent damage to the cabinet by the lift cables. Spreader bars must be of sufficient length so that cables do not come in contact with the unit during transport. Remove wood struts mounted beneath unit base frame before setting unit on roof curb. These struts are intended to protect unit base frame from fork lift damage. To remove the struts, extract the sheet metal retainers and pull the struts through the base of the unit. Refer to rigging label on the unit.

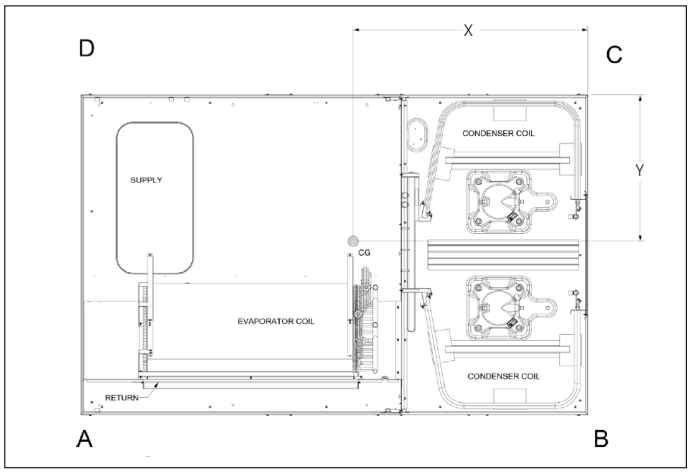

Corner & Center-of-Gravity Locations

Important: If using bottom discharge with roof curb, ductwork should be attached to the curb prior to installing the unit. Refer to the Roof Curb Installation Instructions for proper curb installation. Curbing must be installed in compliance with the National Roofing Contractors Association Manual. Lower unit carefully onto roof mounting curb. While rigging the unit, the center of gravity will cause the condenser end to be lower than the supply air end. Bring condenser end of unit into alignment with the curb. With condenser end of the unit resting on curb member and using curb as a fulcrum, lower opposite end of the unit until entire unit is seated on the curb. When a rectangular cantilever curb is used, take care to center the unit. Check for proper alignment and orientation of supply and return openings with duct.

Roof Curb Installation

The roof curb is field-assembled and must be installed level (within 1/16" per foot side to side). A sub-base must be constructed by the contractor in applications involving pitched roofs. Gaskets are furnished and must be installed between the unit and curb. For proper installation, follow NRCA guidelines. In applications requiring post and rail installation, an I-beam securely mounted on multiple posts should support the unit on each side. In addition, the insulation on the underside of the unit should be protected from the elements. Applications in geographic areas subjected to seismic or hurricane conditions must meet code requirements for fastening the unit to the curb and the curb to the building structure. For further and more detailed information please refer to our Daikin Light Commercial Packaged unit IOD.

Weights

Model	Shipping Weight (lbs)	Operating Weight (lbs)	Corner Weights (lbs)				Length	Width
			A	B	C	D	X (in)	Y (in)
DHC0903D	1215	1155	222	376	328	229	44 4/5	28⅛
DHC1023D	1234	1176	298	307	264	307	45 1/10	28⅛
DHC1203D	1252	1195	268	355	295	277	44½	28 1/10
DHC1503D	1277	1218	281	343	311	283	45	28⅛

For details on accessories refer to document **PM-LC-ACCESSORIES**

Notes

Notes

Notes

Our continuing commitment to quality products may mean a change in specifications without notice.
©2025 DAIKIN COMFORT TECHNOLOGIES MANUFACTURING, INC. • Houston, Texas • Printed in the USA.